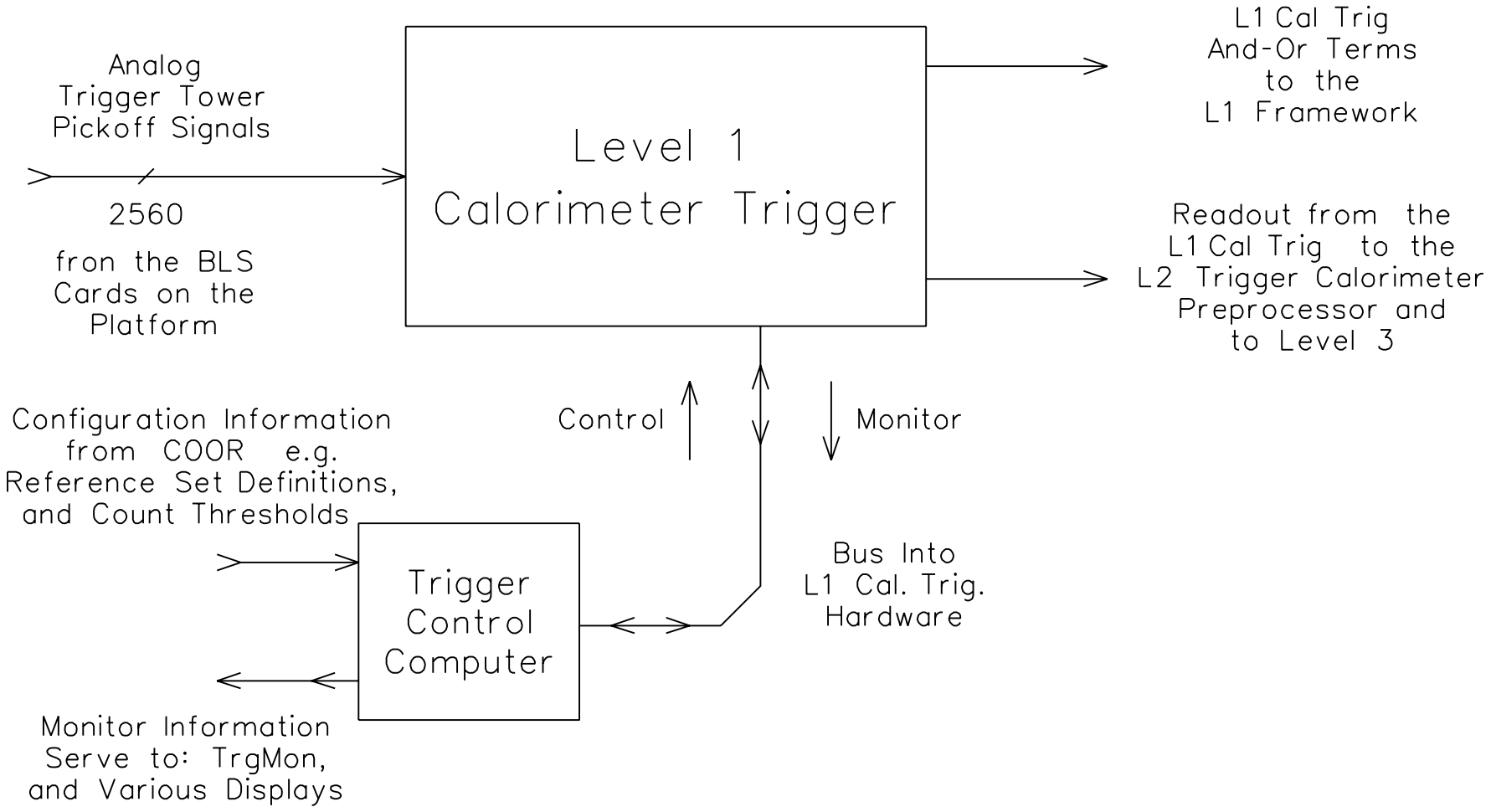Run IIA Level 1 Calorimeter Trigger