# Programmable "OR" plus Latch for the Level 2 Framework

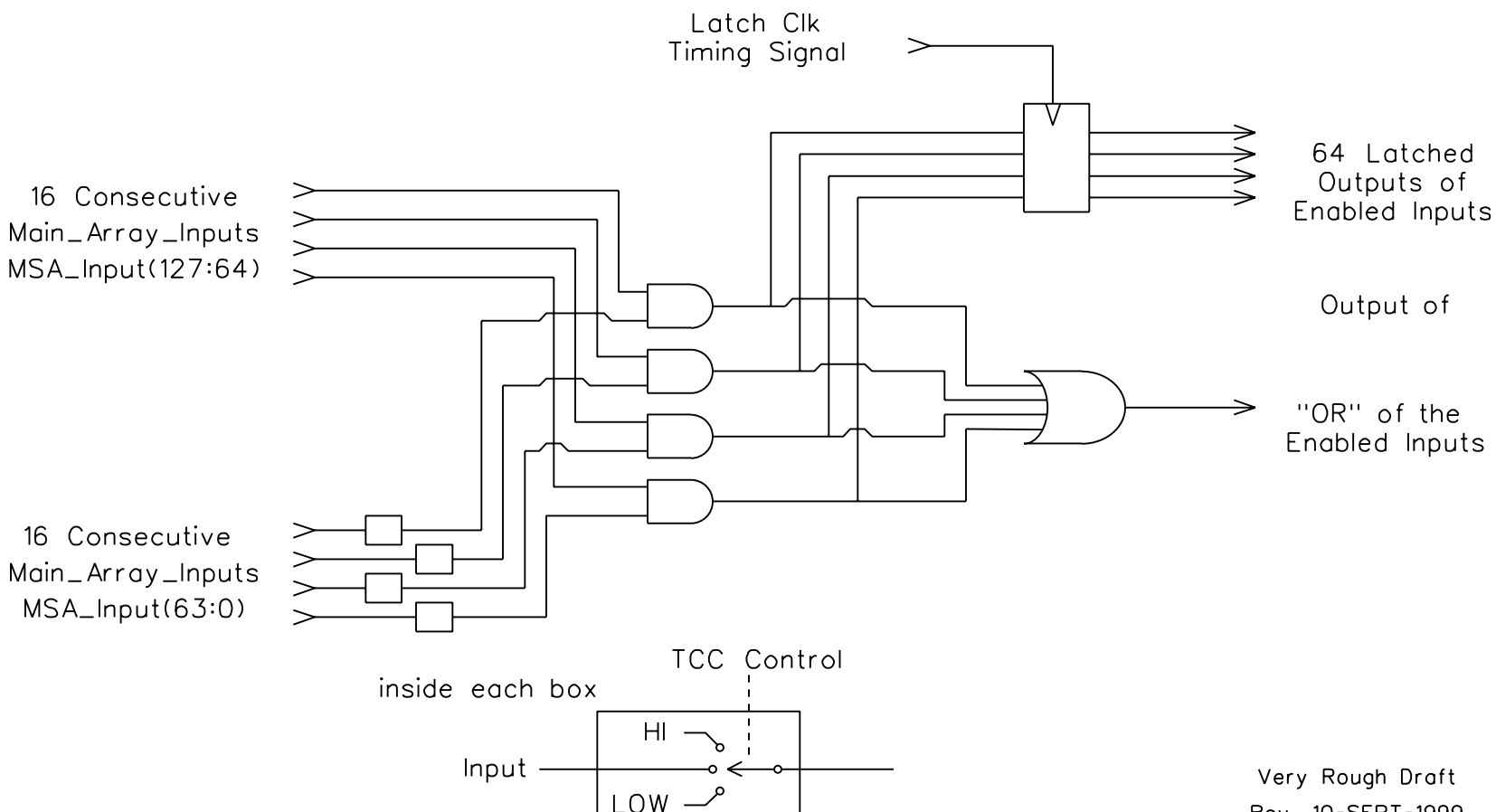


Very Rough Draft
Rev. 10-SEPT-1999