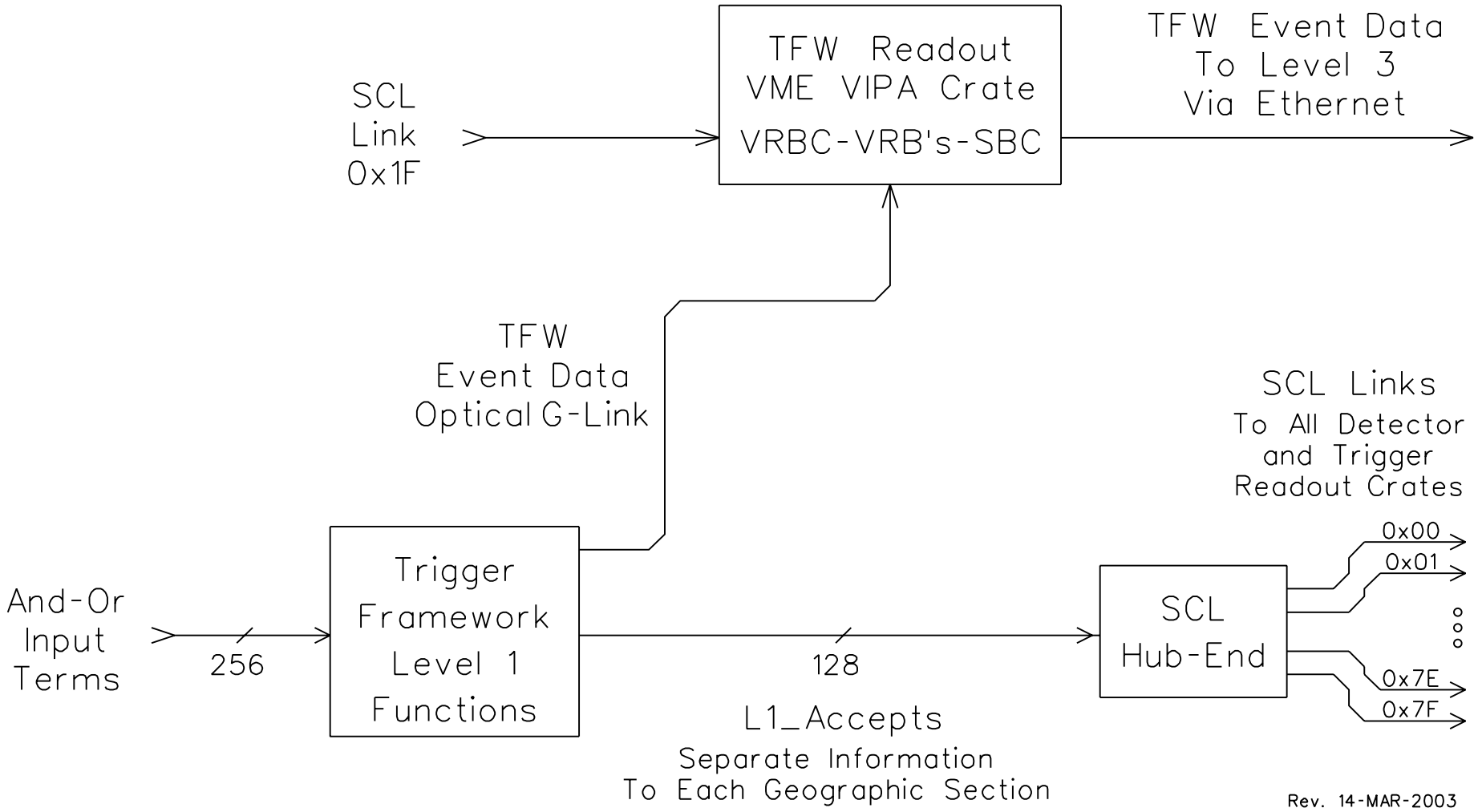Trigger Framework Readout to Level 3