Level 1 Trigger Control Computer Connections

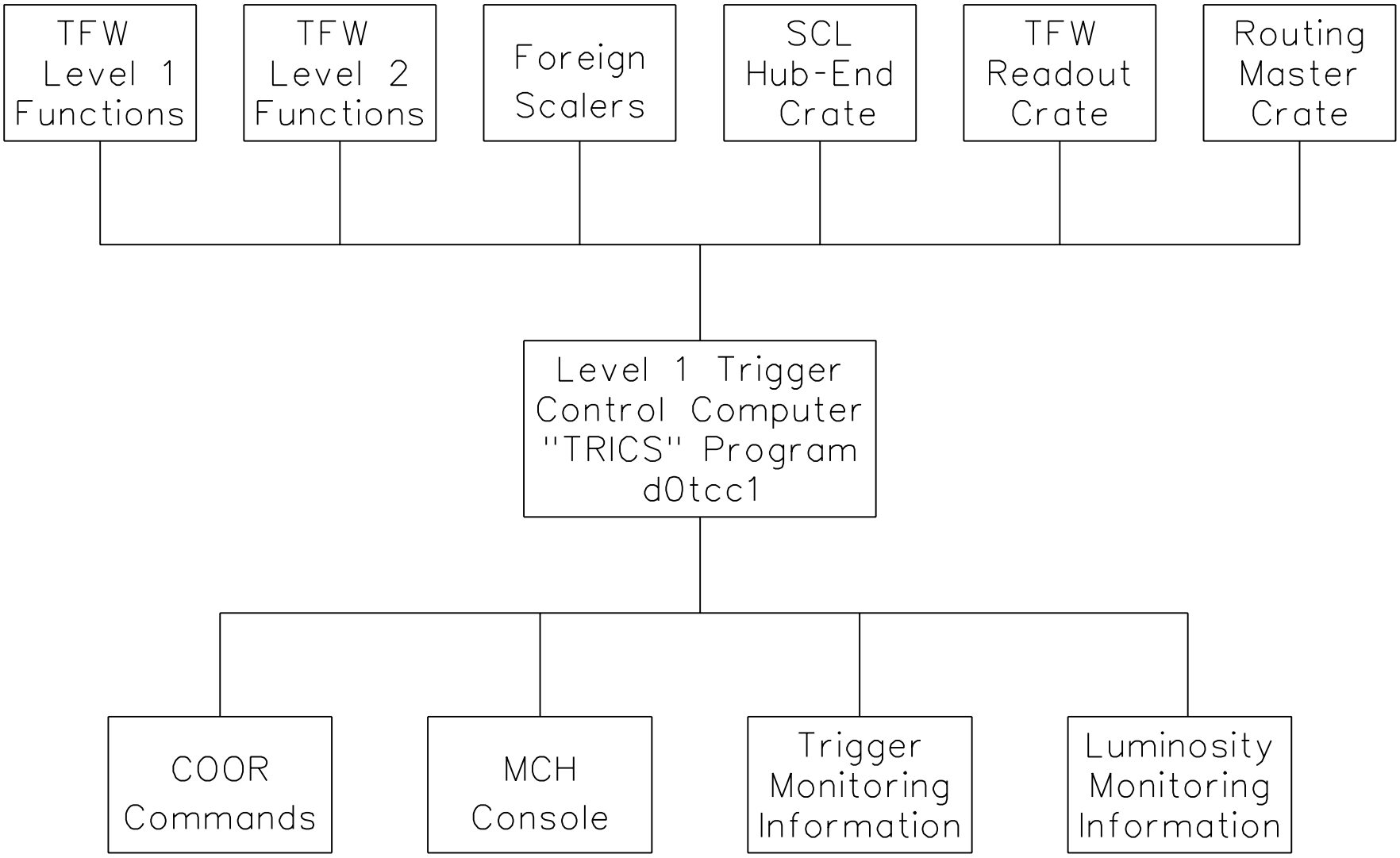

Rev. 16-MAR-2003