Run II ALPHA Trigger Processor System

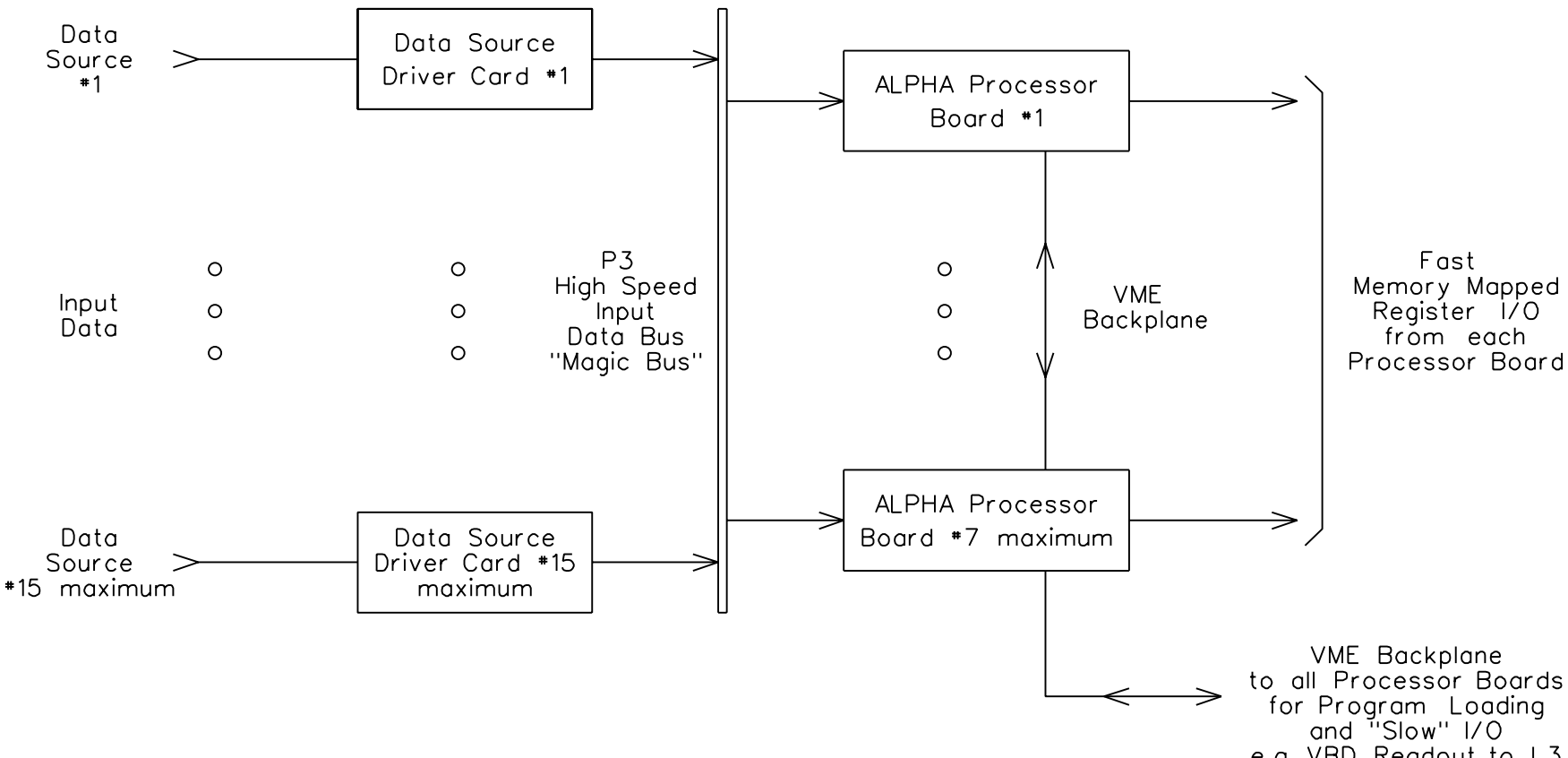

Rev. 27-FEB-1997