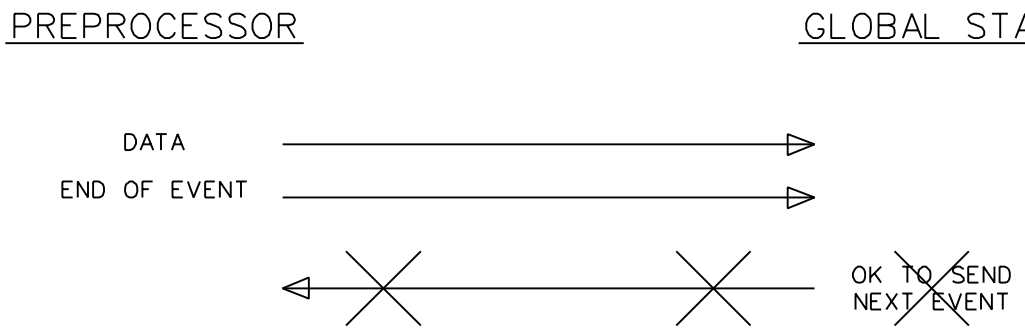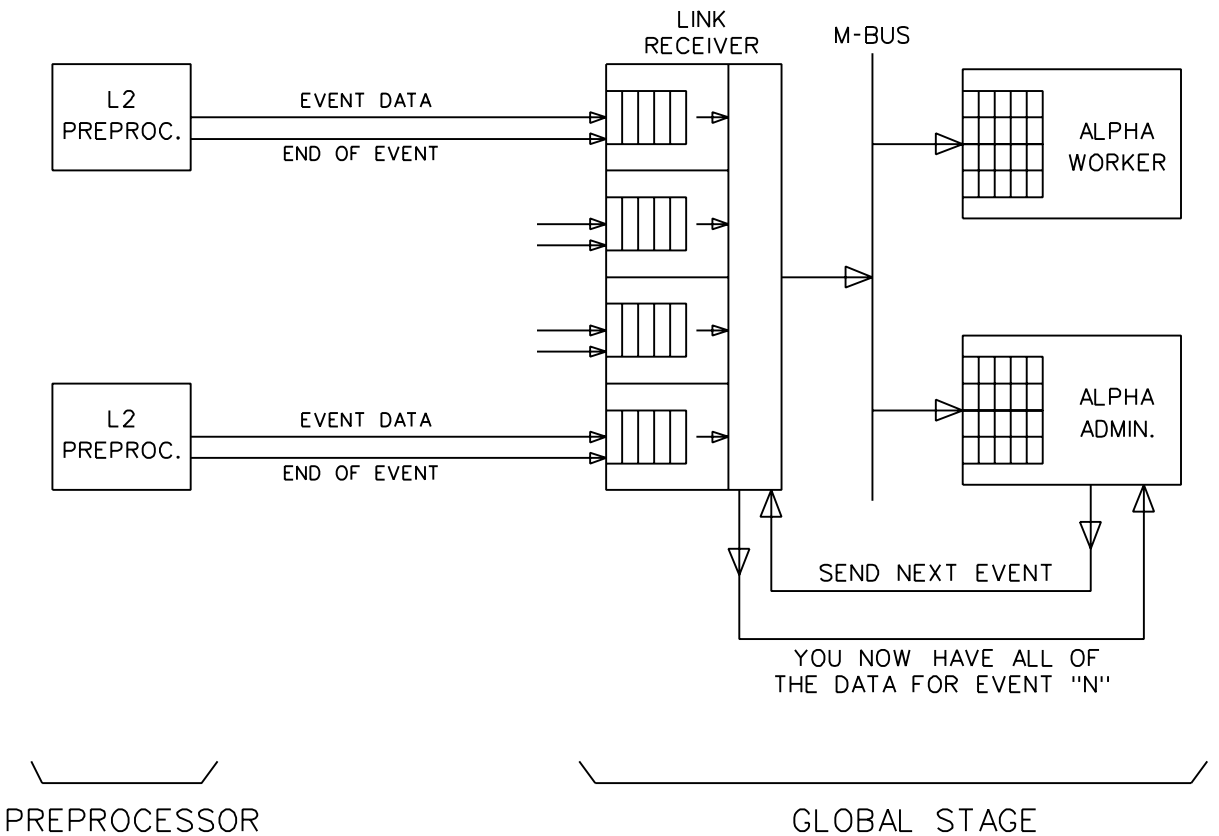DATA TRANSFER INTO THE L2 GLOBAL STAGE