L2 Preprocessor to L2 Global Data Link Receiver Card

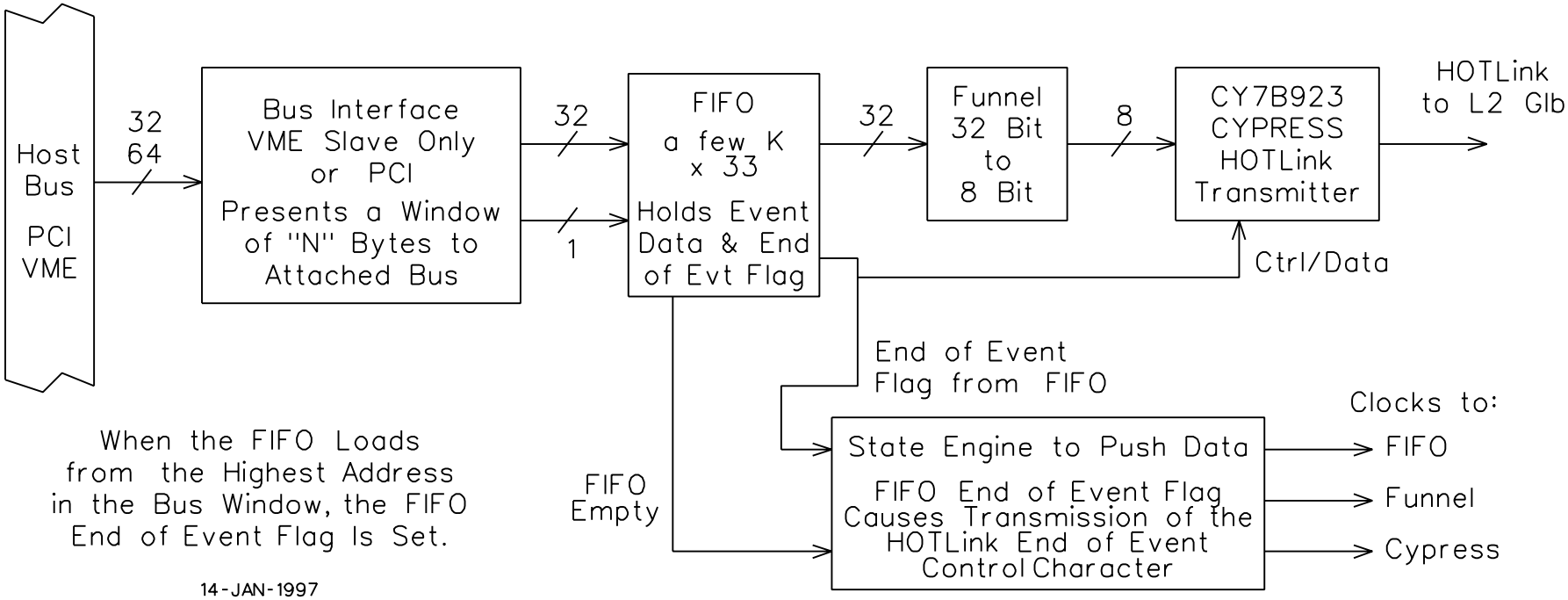

When the FIFO Loads from the Highest Address in the Bus Window, the FIFO End of Event Flag Is Set.

14-JAN-1997