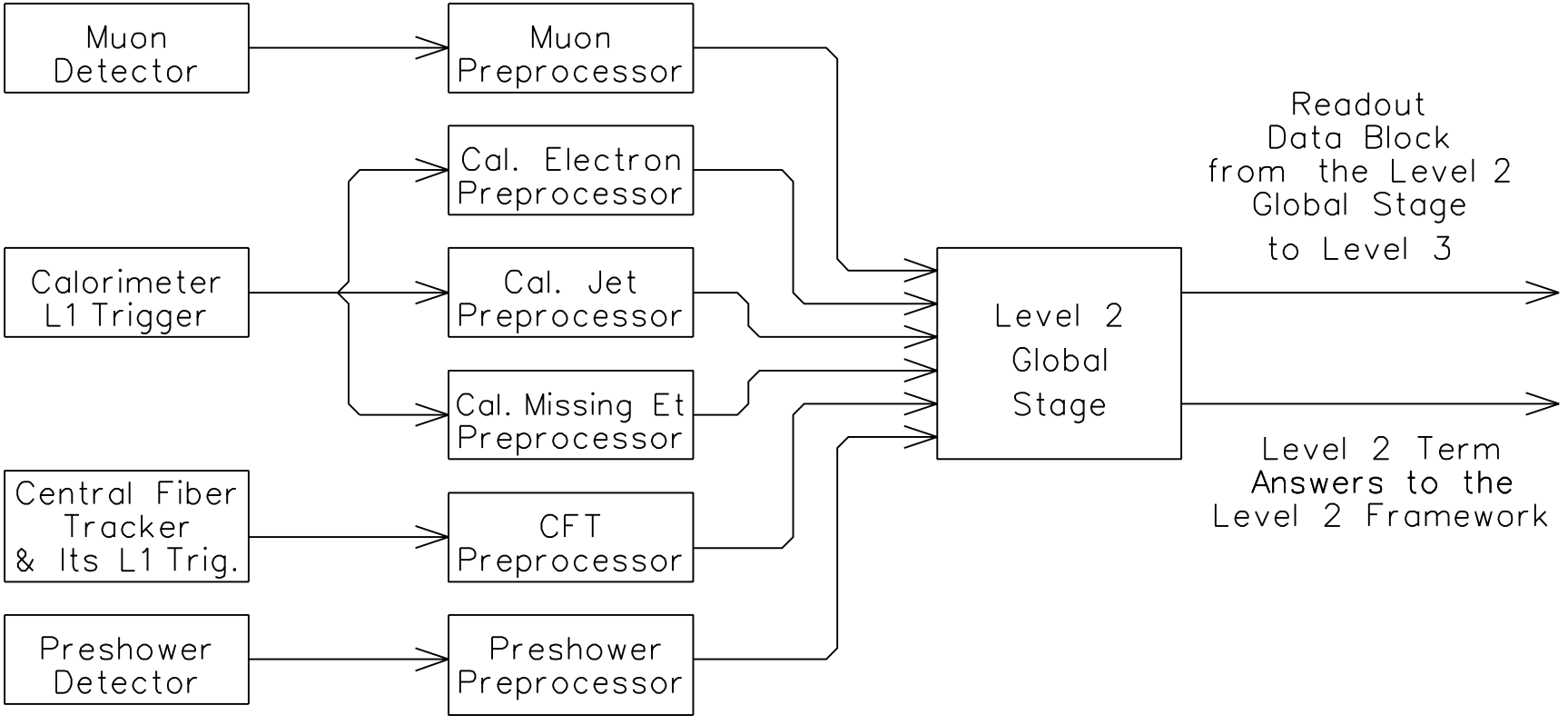Level 2 Trigger Block Diagram