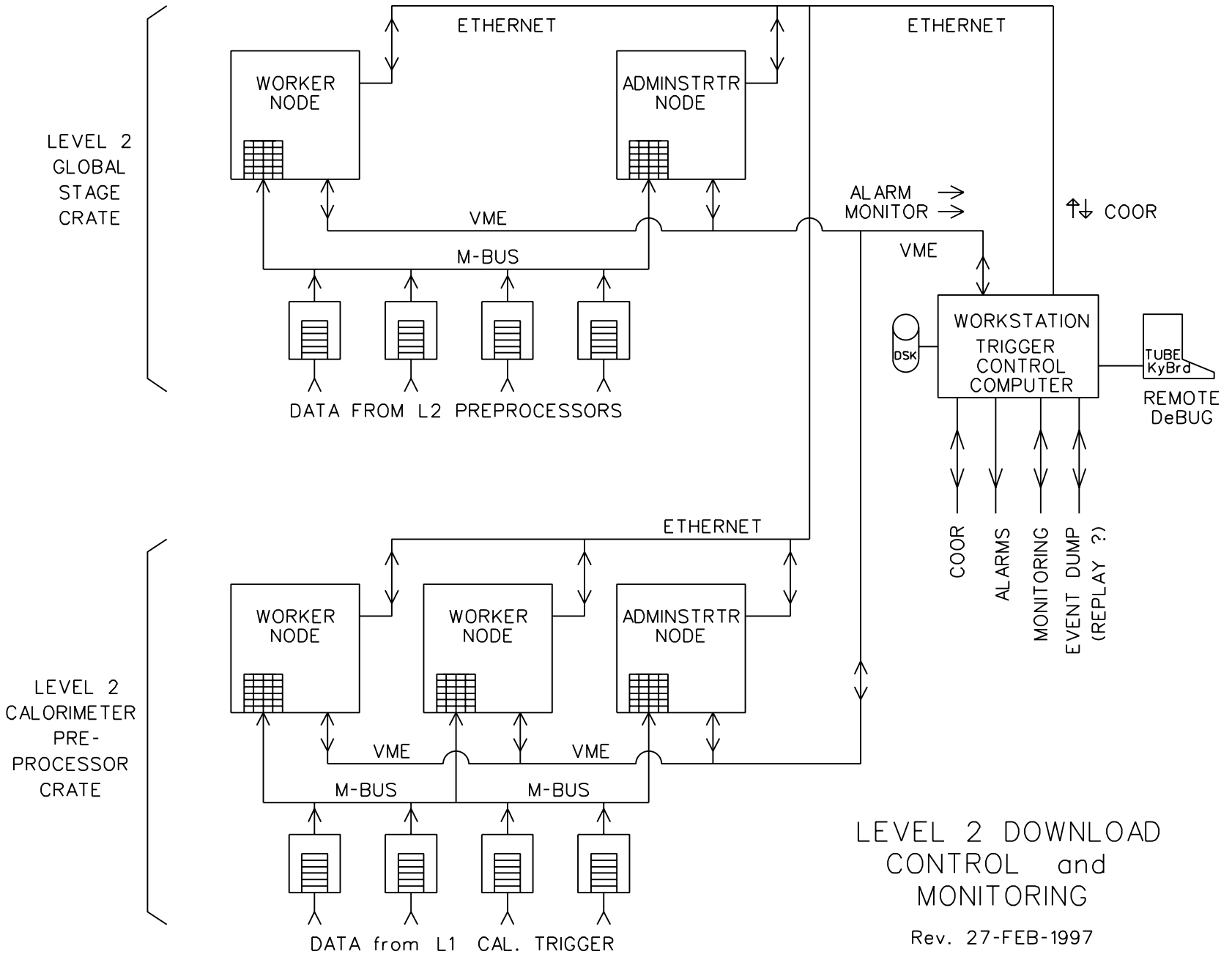
LEVEL 2
GLOBAL
STAGE
CRATE
ETHERNET
ETHERNET
WORKER
NODE
ADMINSTRTR
NODE
VME
M-BUS
ALARM
MONITOR
COOR
VME
DSK
WORKSTATION
TRIGGER
CONTROL
COMPUTER
TUBE
KyBrd
REMOTE
DeBUG
DATA FROM L2 PREPROCESSORS
COOR
ALARMS
MONITORING
EVENT DUMP
(REPLAY ?)
ETHERNET
LEVEL 2
CALORIMETER
PRE-
PROCESSOR
CRATE
WORKER
NODE
WORKER
NODE
ADMINSTRTR
NODE
VME
VME
M-BUS
M-BUS
DATA from L1 CAL. TRIGGER
LEVEL 2 DOWNLOAD
CONTROL and
MONITORING
Rev. 27-FEB-1997