Block Diagram of:
Detector Main Readout and the Level 2 Trigger

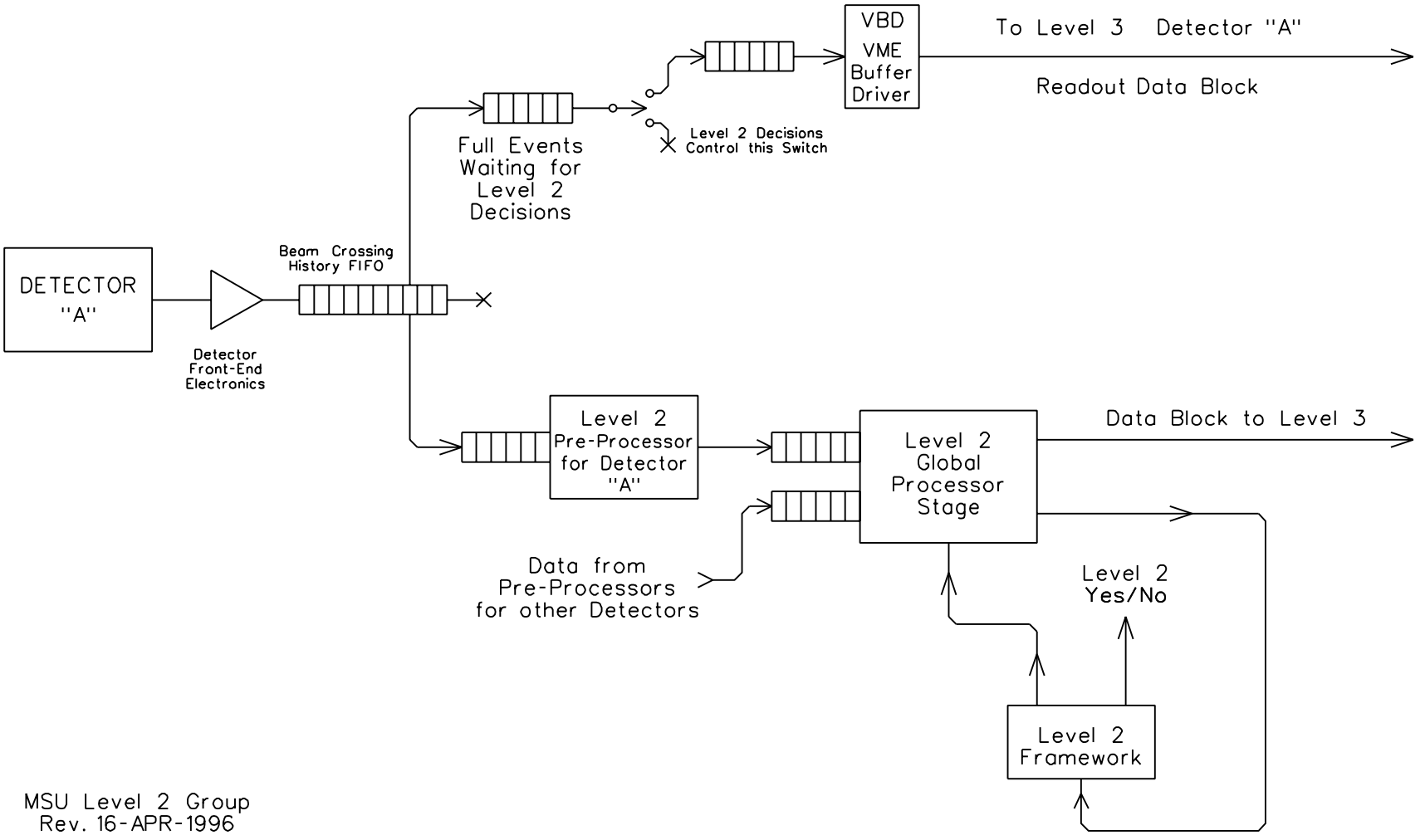

MSU Level 2 Group
Rev. 16-APR-1996