ORGANIZATION OF THE SCALAR ADDER TREES

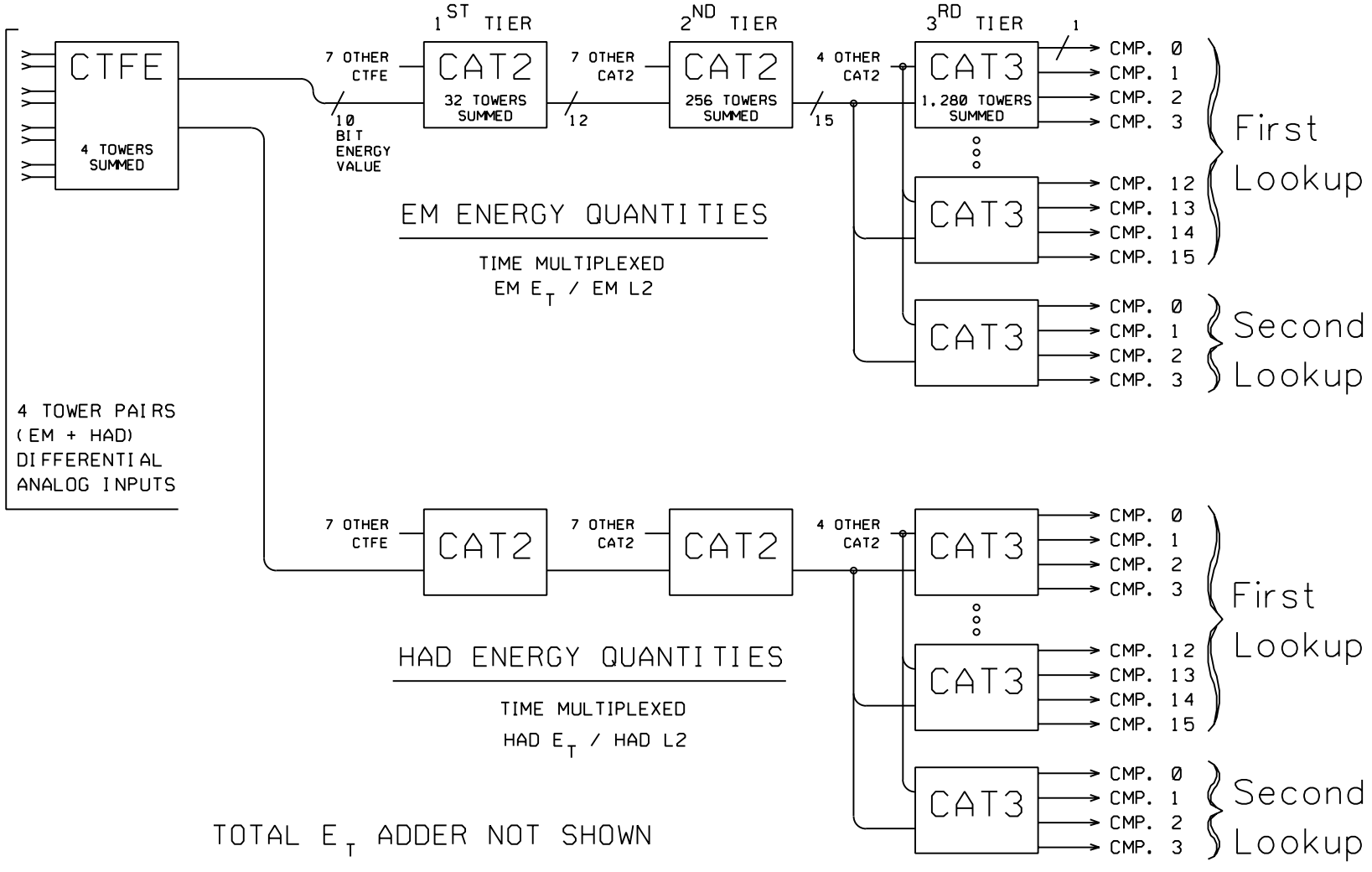

23-JAN-1992