Differential Amplifier

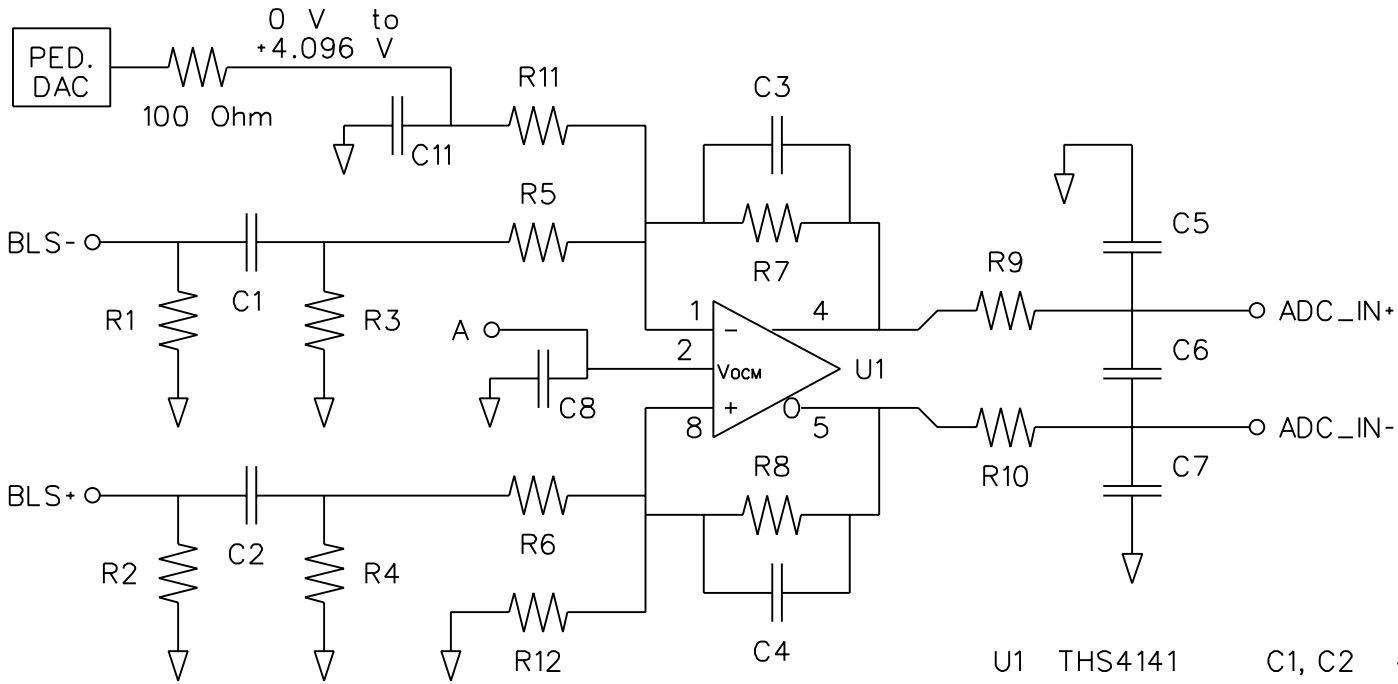

R48 and R49 supply the common mode reference to both Diff Amps that drive the dual ADC.

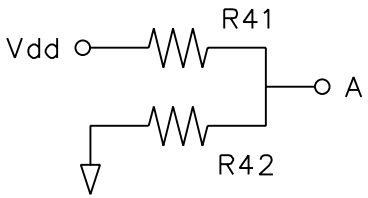

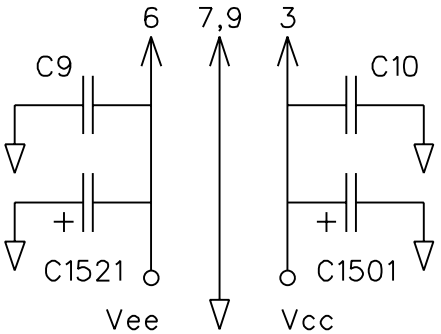

U1	THS4141	C1, C2	470 nFd
R1, R2	1 meg	C3, C4	18 pFd
R3, R4	78.7	C5, C7	27 pFd
R5, R6	1.02k	C6	15 pFd
R7, R8	499	C8, C9	0.1 uFd
R9, R10	150	C10, C11	0.1 uFd
R11, R12	1.74k		
R41	2.15k	C1501, C1521	10 uFd shared by both Diff Amps
R42	1k		

The reference designators for the second Diff Amp start at 21.

Revision Data: 30-NOV-2004