# ADF Crate BX Clock Backplane Distribution

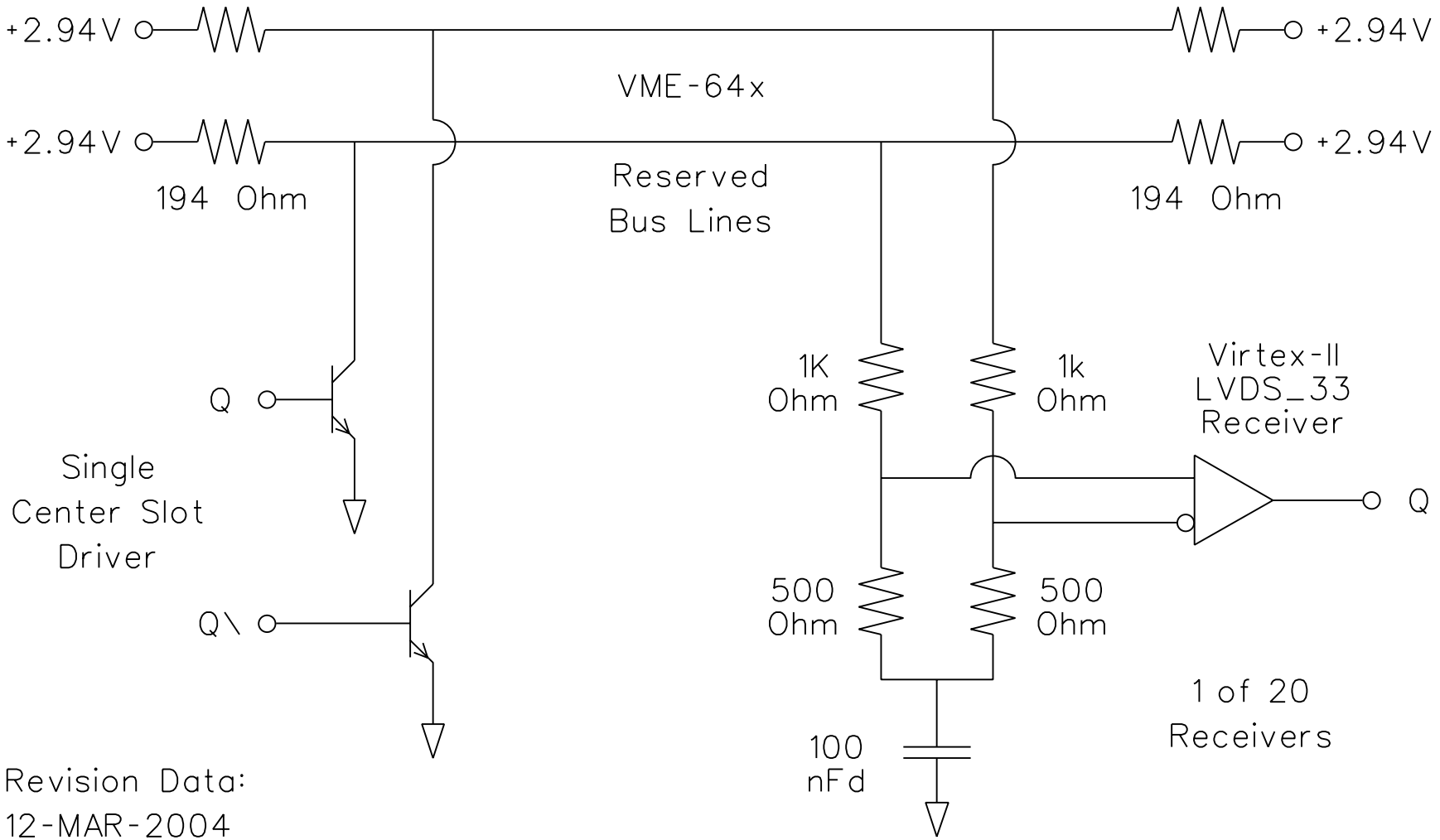


Revision Data:
12-MAR-2004