ADF-2 Board Control PAL VME Interface

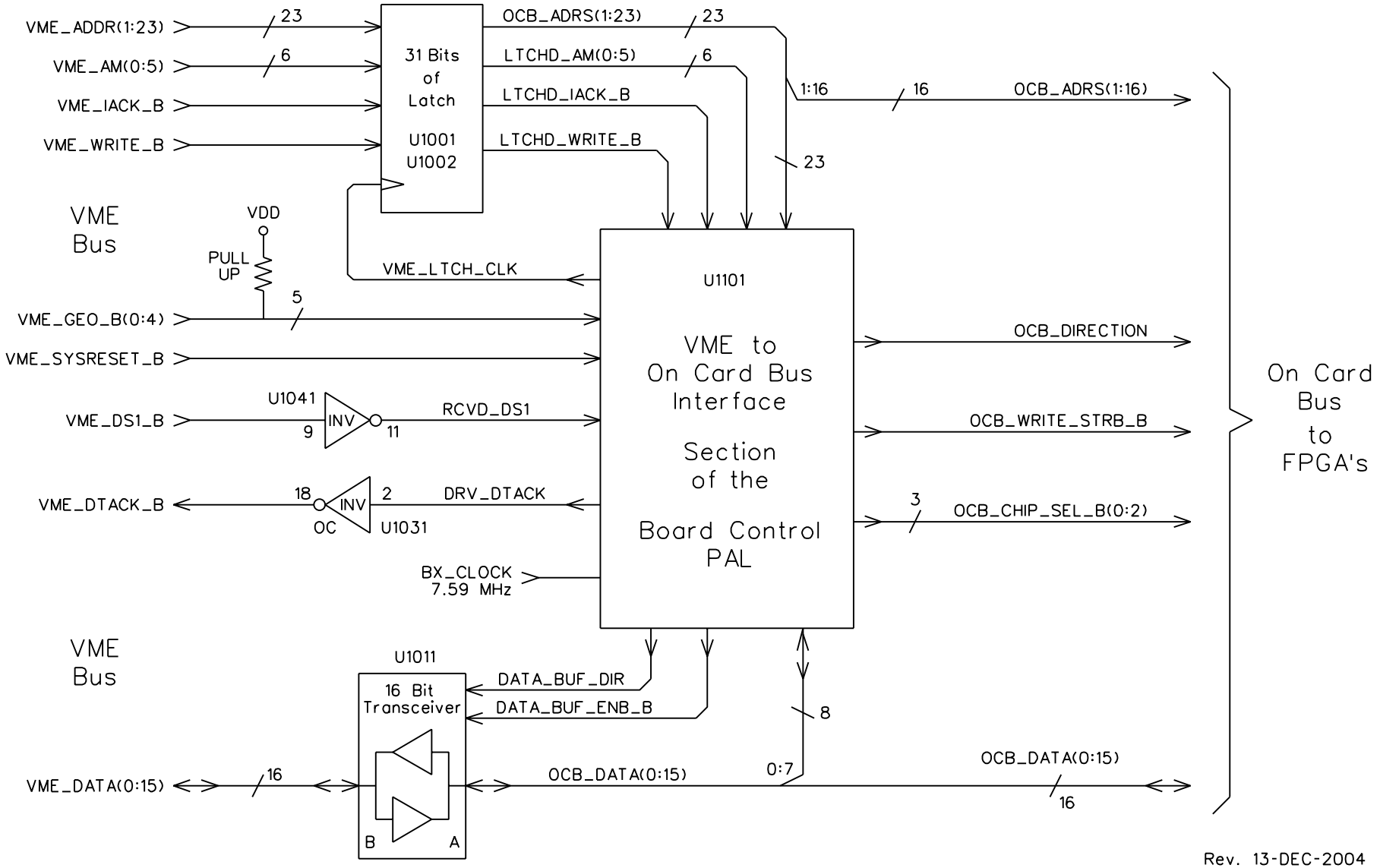

Rev. 13-DEC-2004