ADF-2 Clock Signals

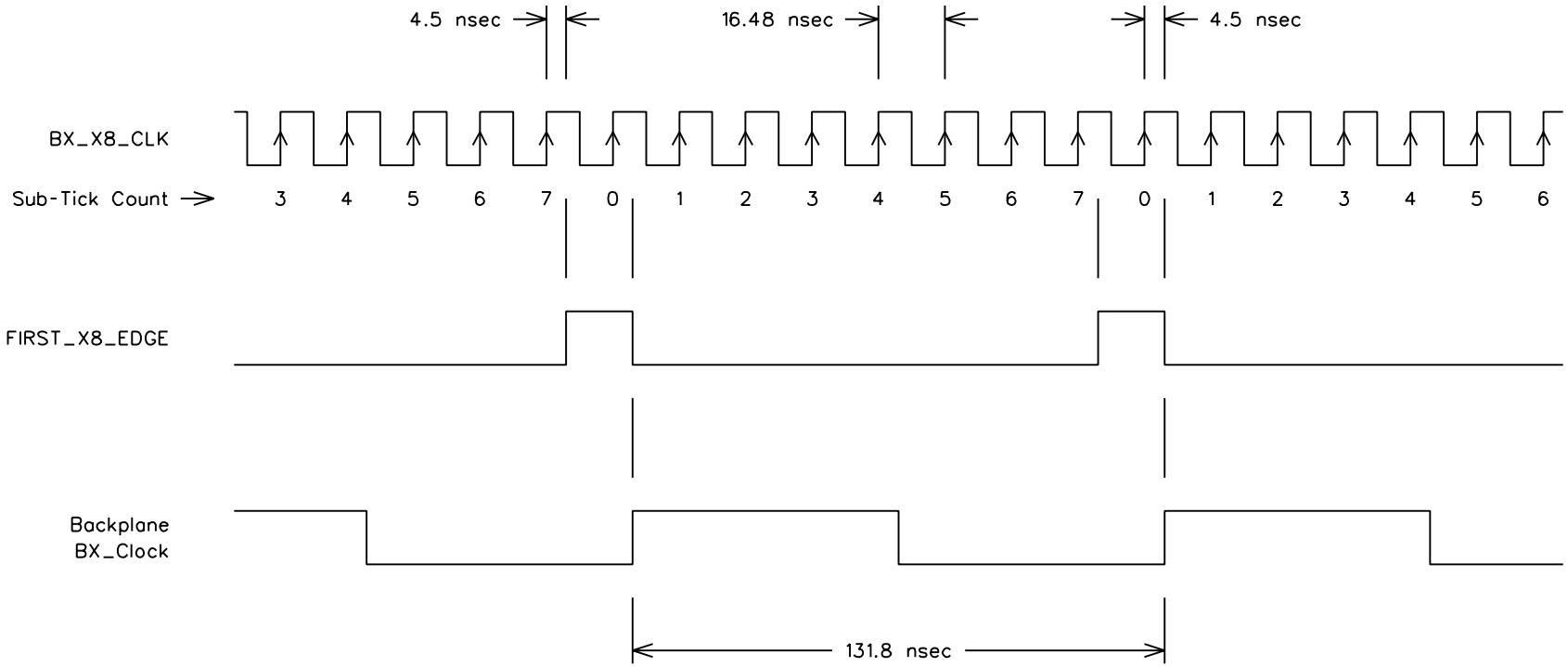

Rev. 16-JULY-2004