CTP Front Panel LVDS Transceivers

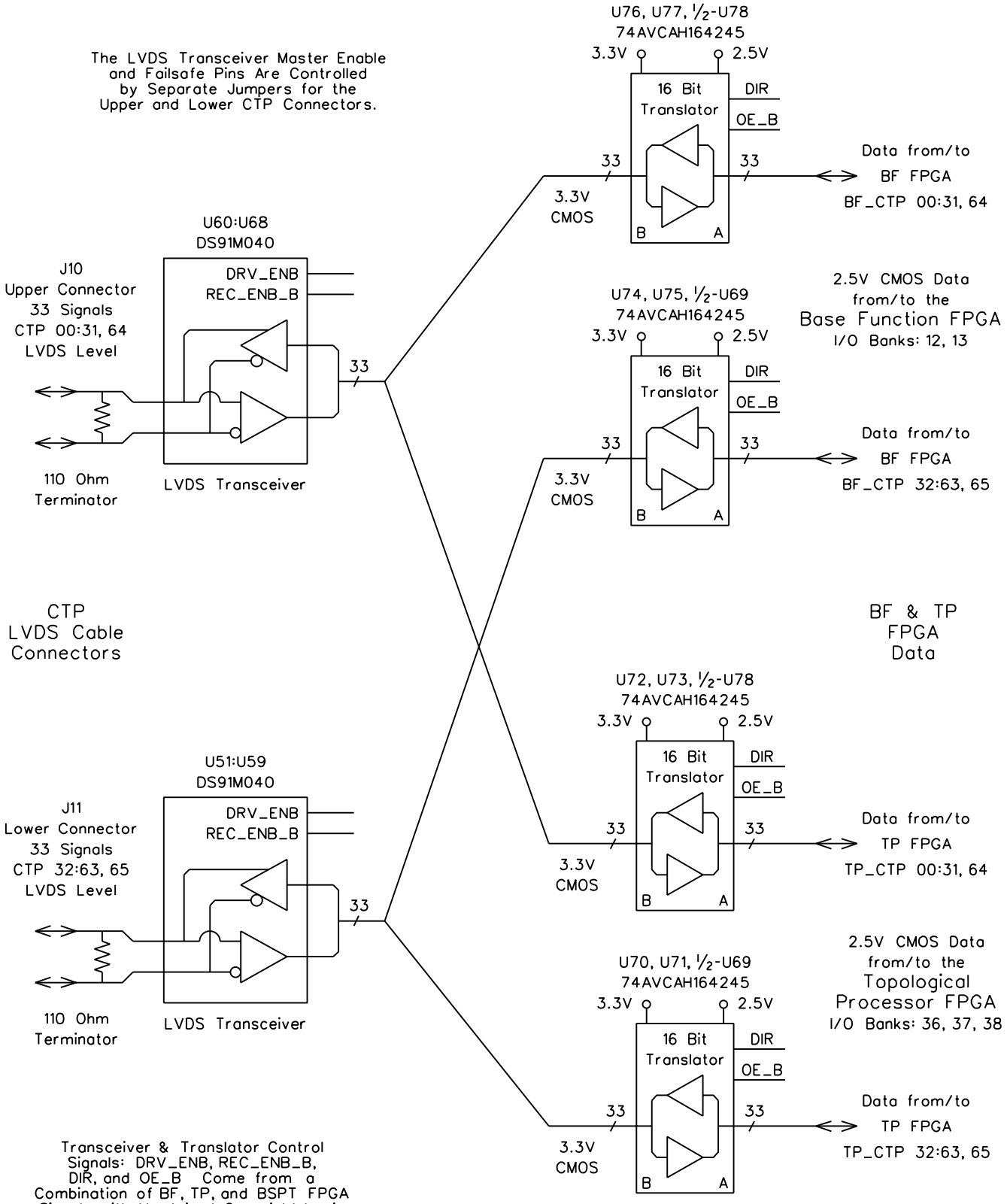

Transceiver & Translator Control Signals: DRV_ENB, REC_ENB_B, DIR, and OE_B Come from a Combination of BF, TP, and BSPT FPGA Signals with Hardwired Oversight Logic

The 4 FPGA Data Signal Groups Are Independently Controllable.

DIR Hi --> A is an Input
B is an Output

Rev. 27-Feb-2013