MiniPOD Hi-Speed Optical Components

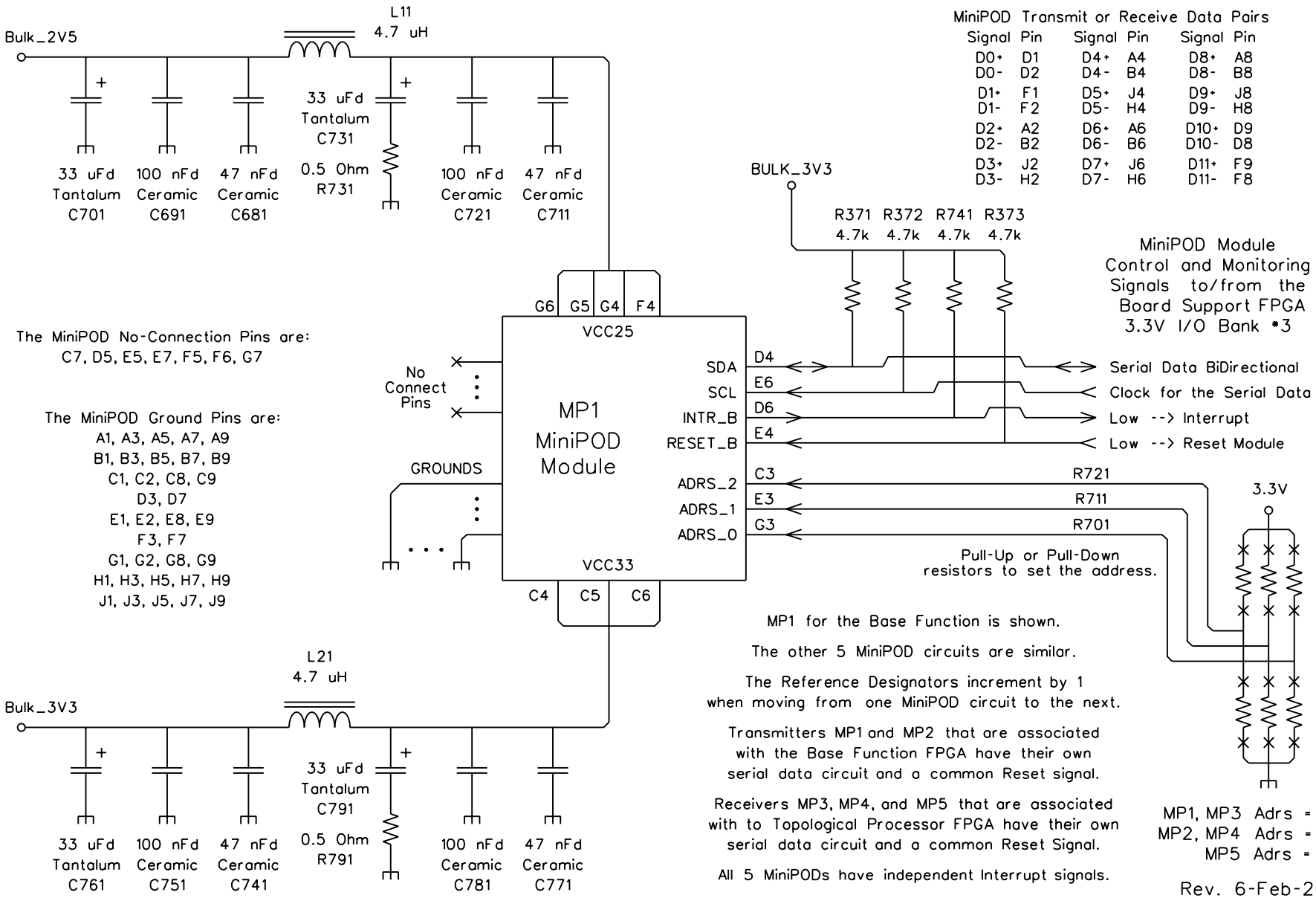

MiniPOD Transmit or Receive Data Pairs

Signal	Pin	Signal	Pin	Signal	Pin
D0+	D1	D4+	A4	D8+	A8
D0-	D2	D4-	B4	D8-	B8
D1+	F1	D5+	J4	D9+	J8
D1-	F2	D5-	H4	D9-	H8
D2+	A2	D6+	A6	D10+	D9
D2-	B2	D6-	B6	D10-	D8
D3+	J2	D7+	J6	D11+	F9
D3-	H2	D7-	H6	D11-	F8

MiniPOD Module Control and Monitoring Signals to/from the Board Support FPGA 3.3V I/O Bank #3

The MiniPOD No-Connection Pins are:
C7, D5, E5, E7, F5, F6, G7

The MiniPOD Ground Pins are:
A1, A3, A5, A7, A9
B1, B3, B5, B7, B9
C1, C2, C8, C9
D3, D7
E1, E2, E8, E9
F3, F7
G1, G2, G8, G9
H1, H3, H5, H7, H9
J1, J3, J5, J7, J9

MP1 for the Base Function is shown.

The other 5 MiniPOD circuits are similar.

The Reference Designators increment by 1 when moving from one MiniPOD circuit to the next.

Transmitters MP1 and MP2 that are associated with the Base Function FPGA have their own serial data circuit and a common Reset signal.

Receivers MP3, MP4, and MP5 that are associated with to Topological Processor FPGA have their own serial data circuit and a common Reset Signal.

All 5 MiniPODs have independent Interrupt signals.

MP1, MP3 Adrs = 0
MP2, MP4 Adrs = 1
MP5 Adrs = 2

Rev. 6-Feb-2013