IPMC: HW-Adrs, Handle Switch, IPMBus

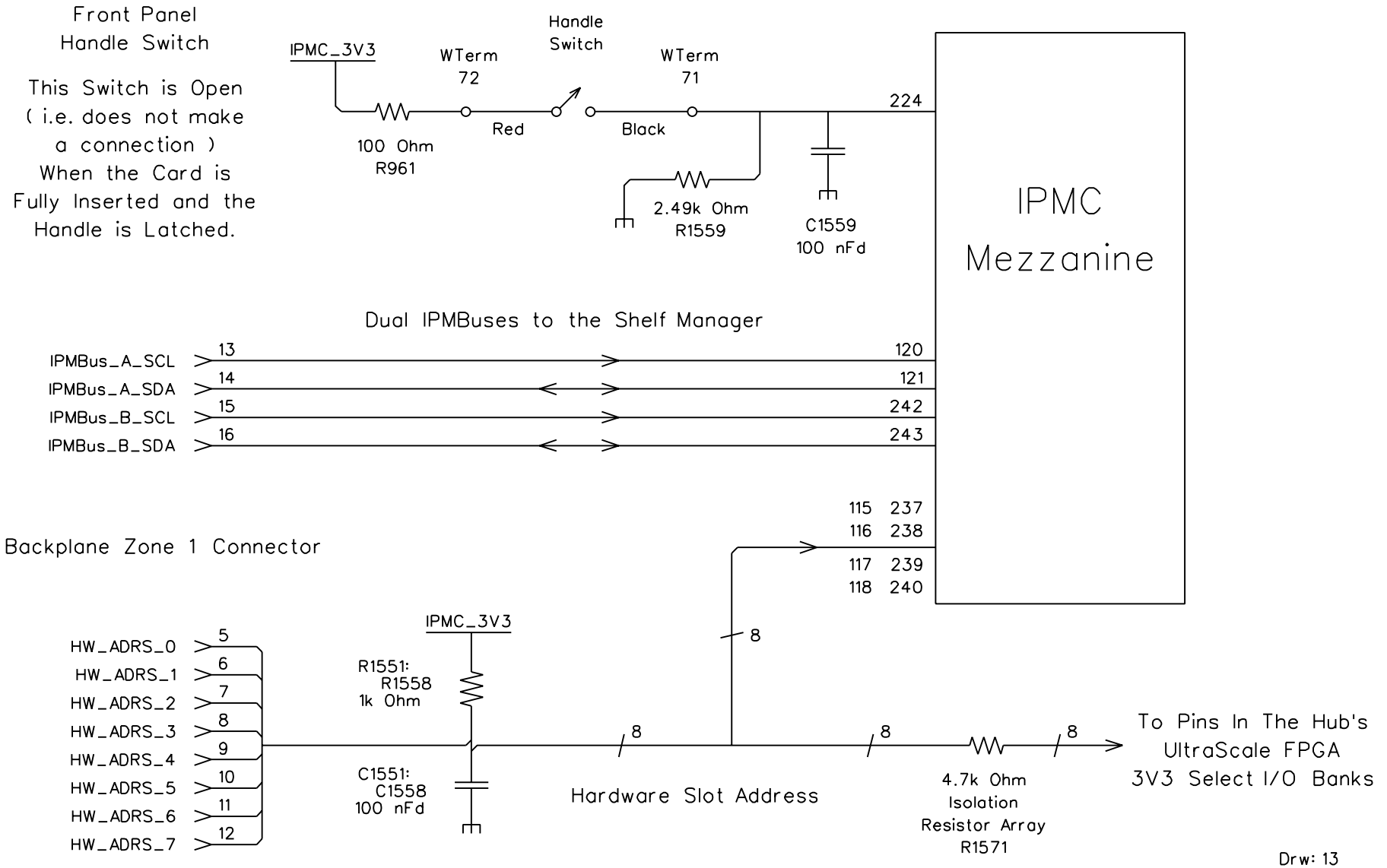

Drw: 13

Rev. 11-Sept-2018