Hub FPGA - Banks 0 & 65 - Configuration

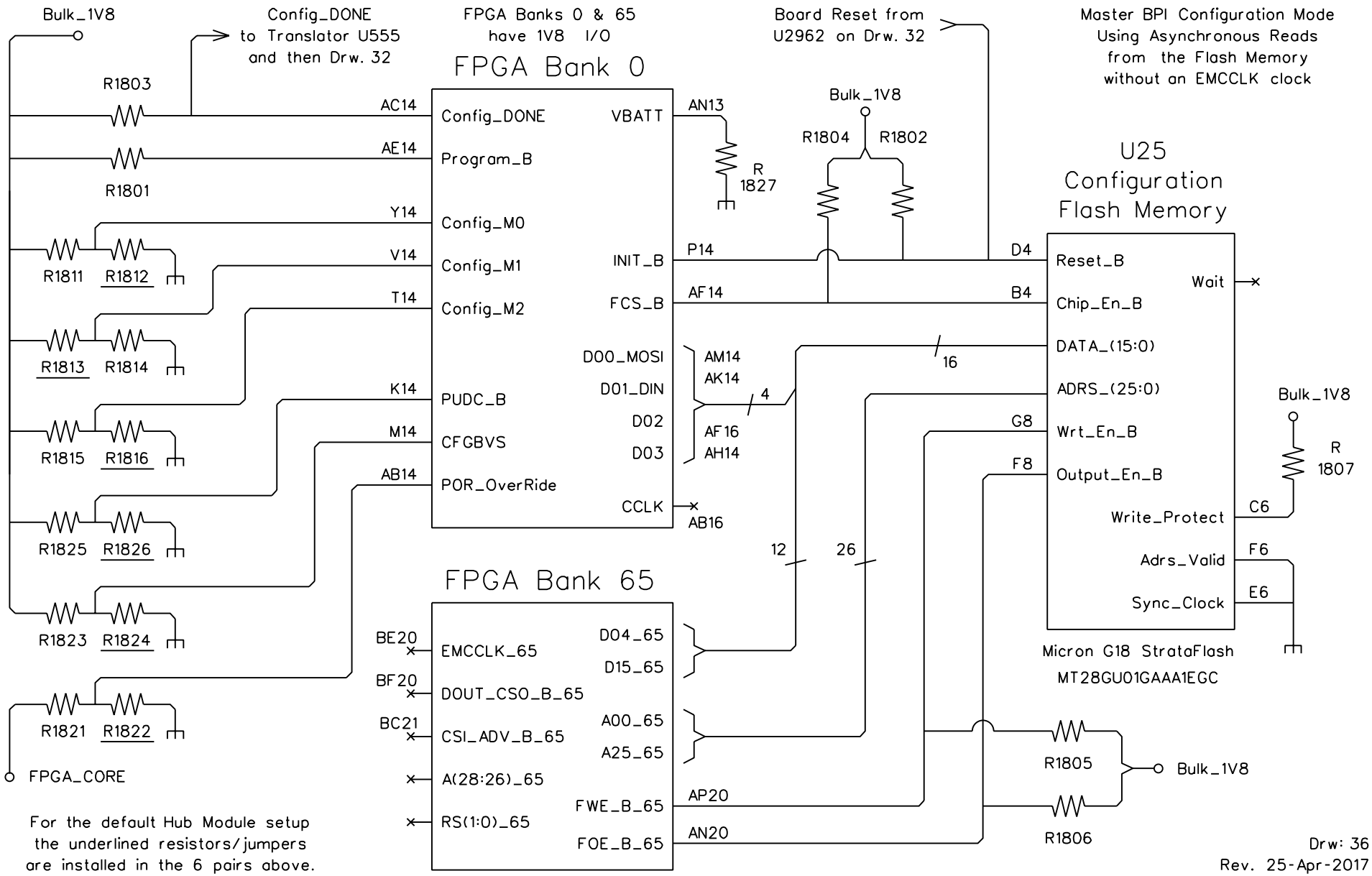

For the default Hub Module setup
the underlined resistors/jumpers
are installed in the 6 pairs above.

Drw: 36
Rev. 25-Apr-2017