ROD plus Hub Overall Sensor I2C Bus

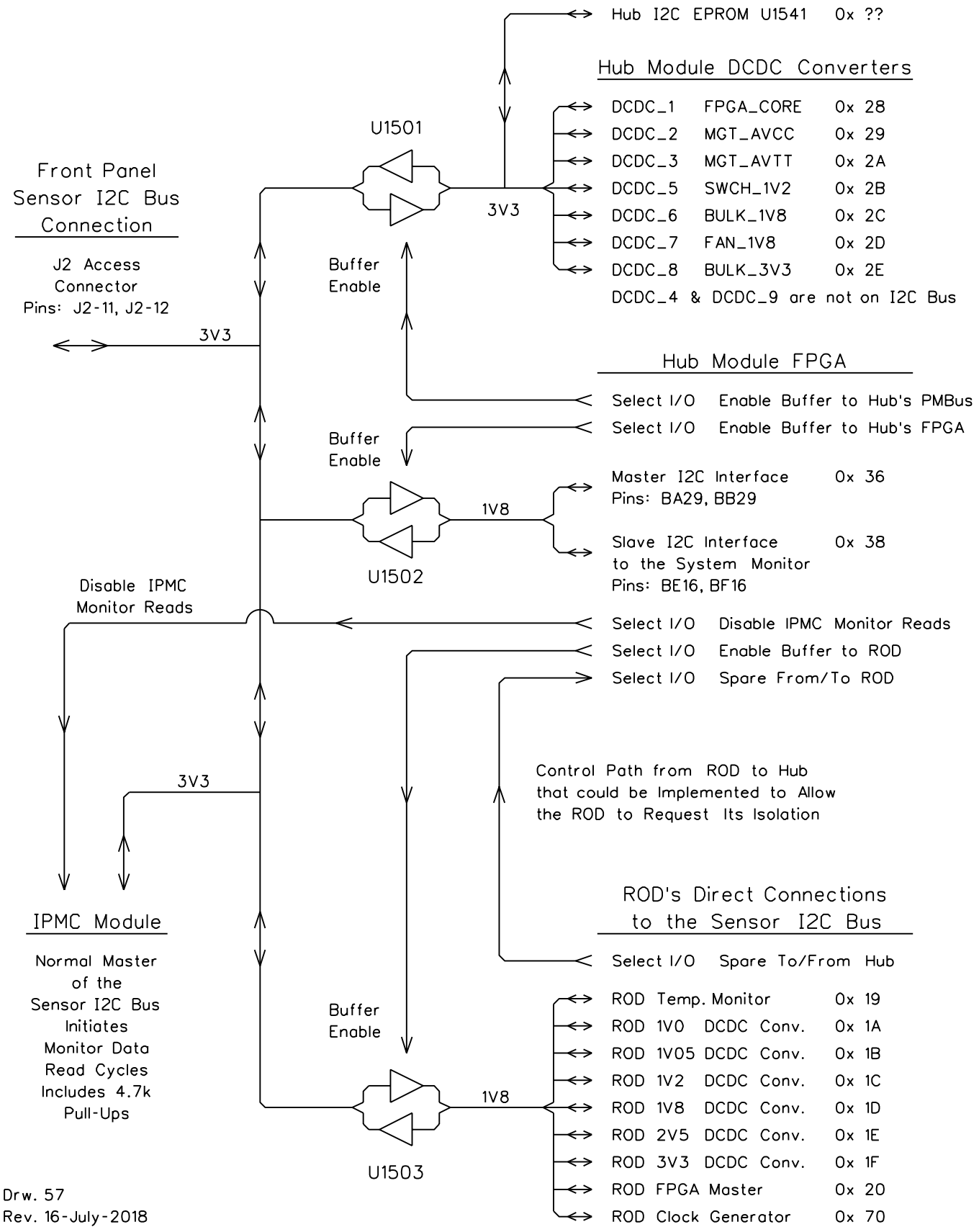

Drw. 57
Rev. 16-July-2018