DETAILS OF AN ADDER TREE

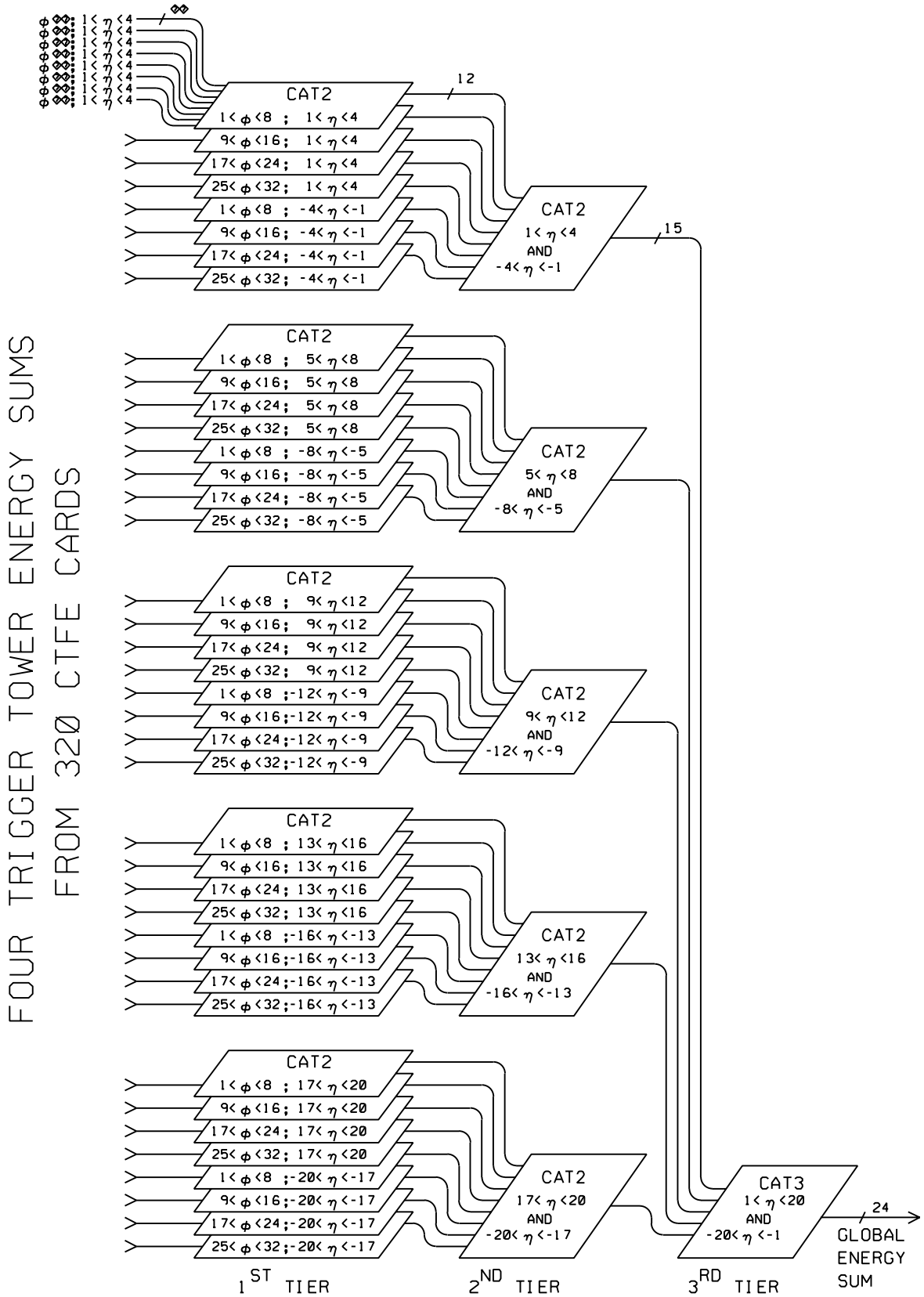

23-JAN-1992