CALORIMETER HOT TOWER COUNTING and REGISTERING CARD

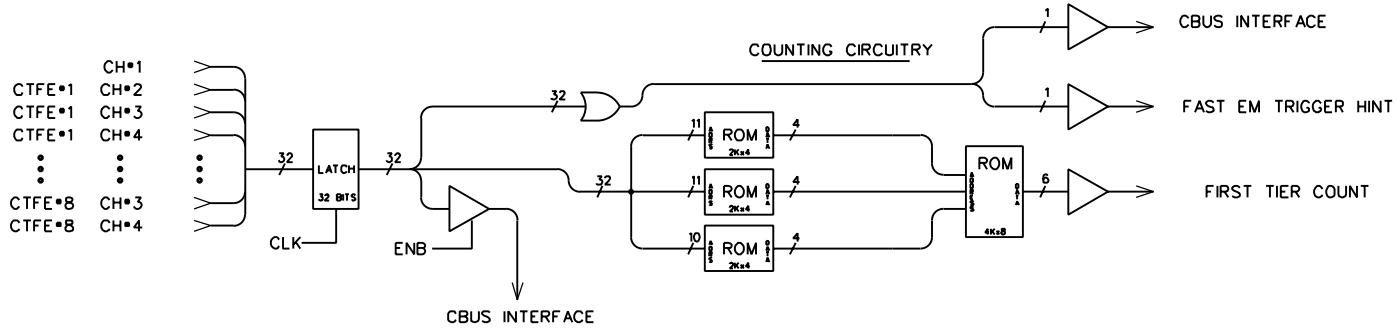

TYPICAL ELECTROMAGNETIC OR TOTAL Et SUB-SECTION LOGIC DIAGRAM

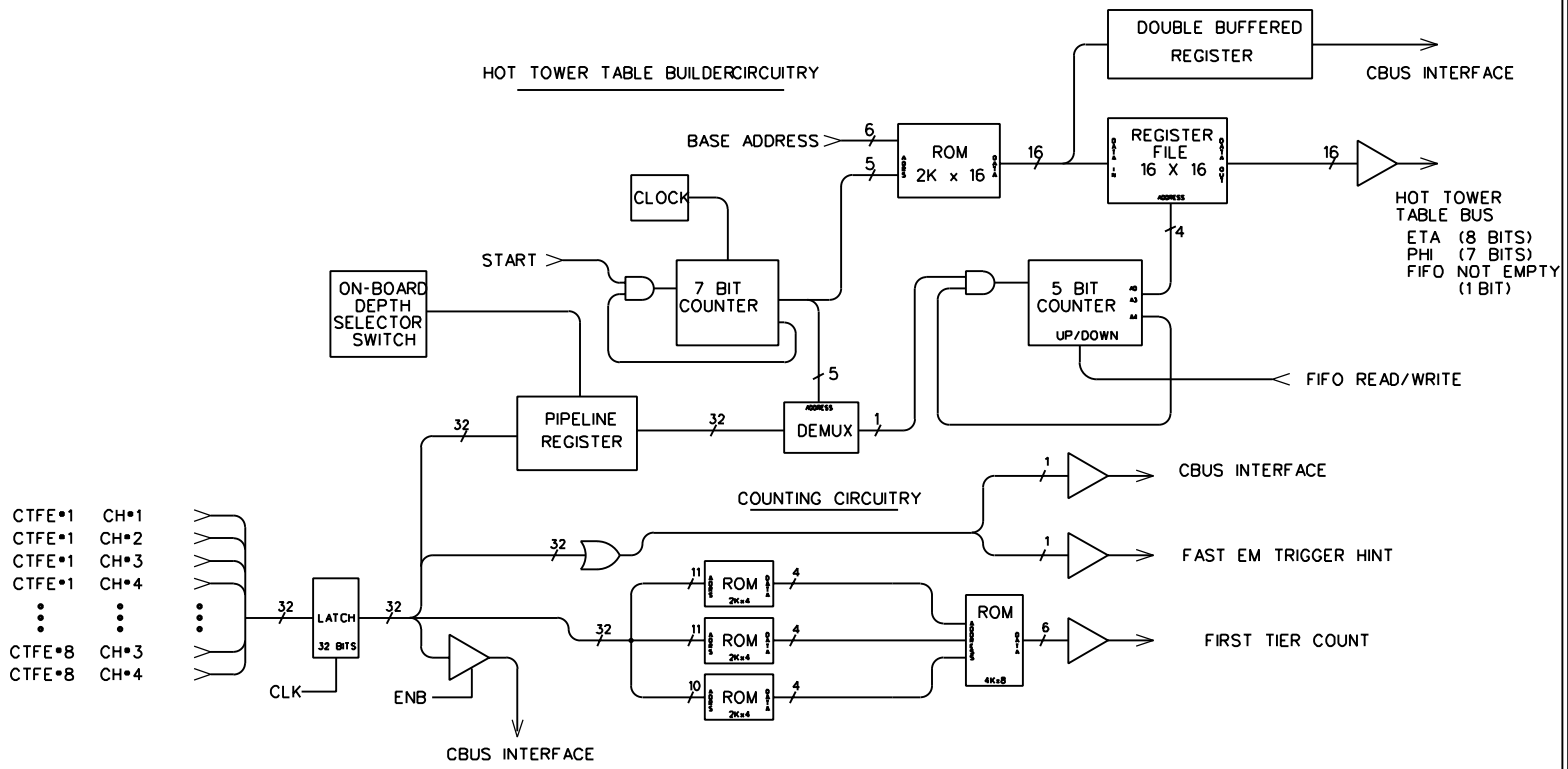

ELECTROMAGNETIC CLUSTER THRESHOLD #3 SUB-SECTION

13-APR-1990