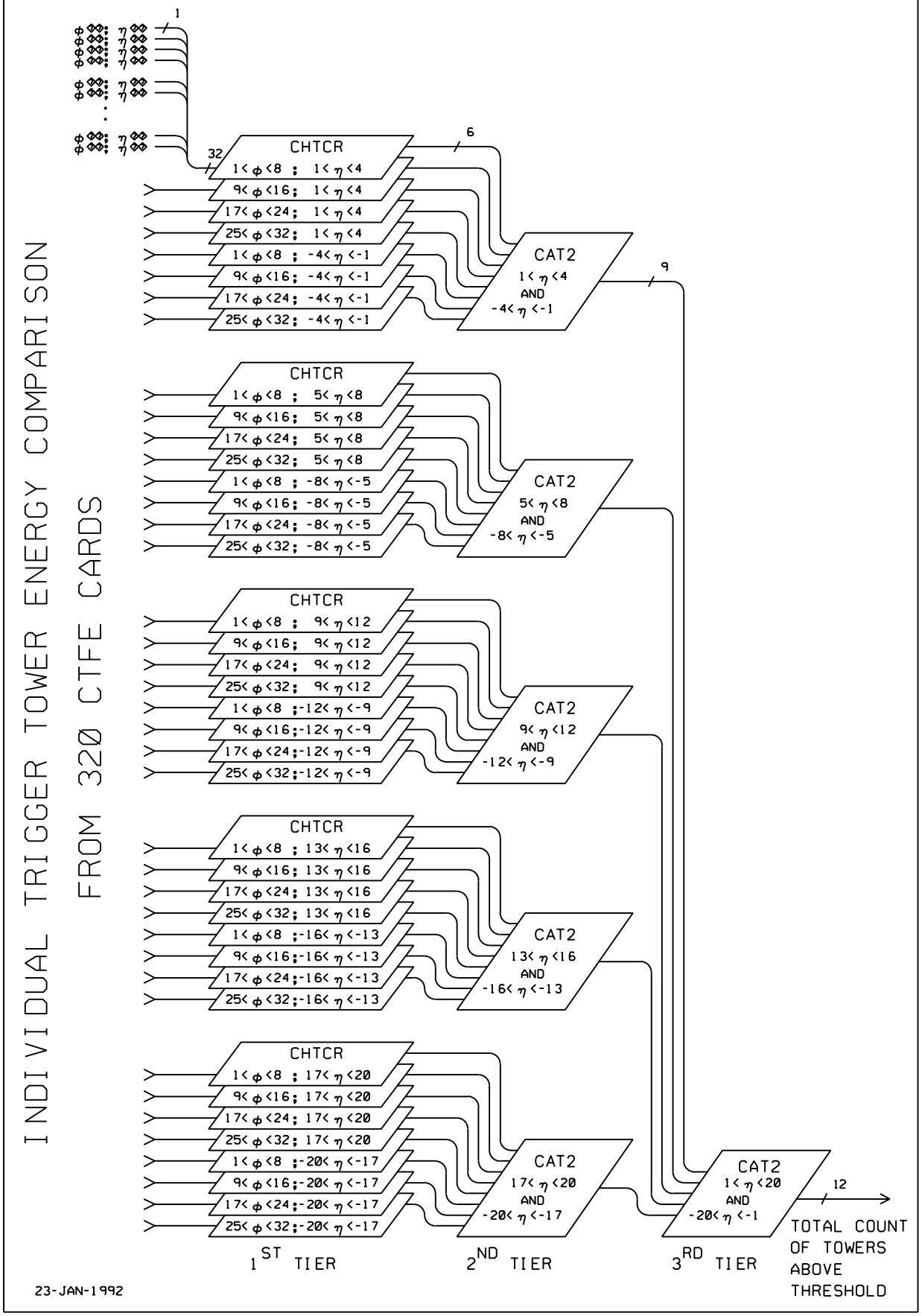DETAILS OF A COUNTER TREE