SCLD Logic for Operation with ADF-2

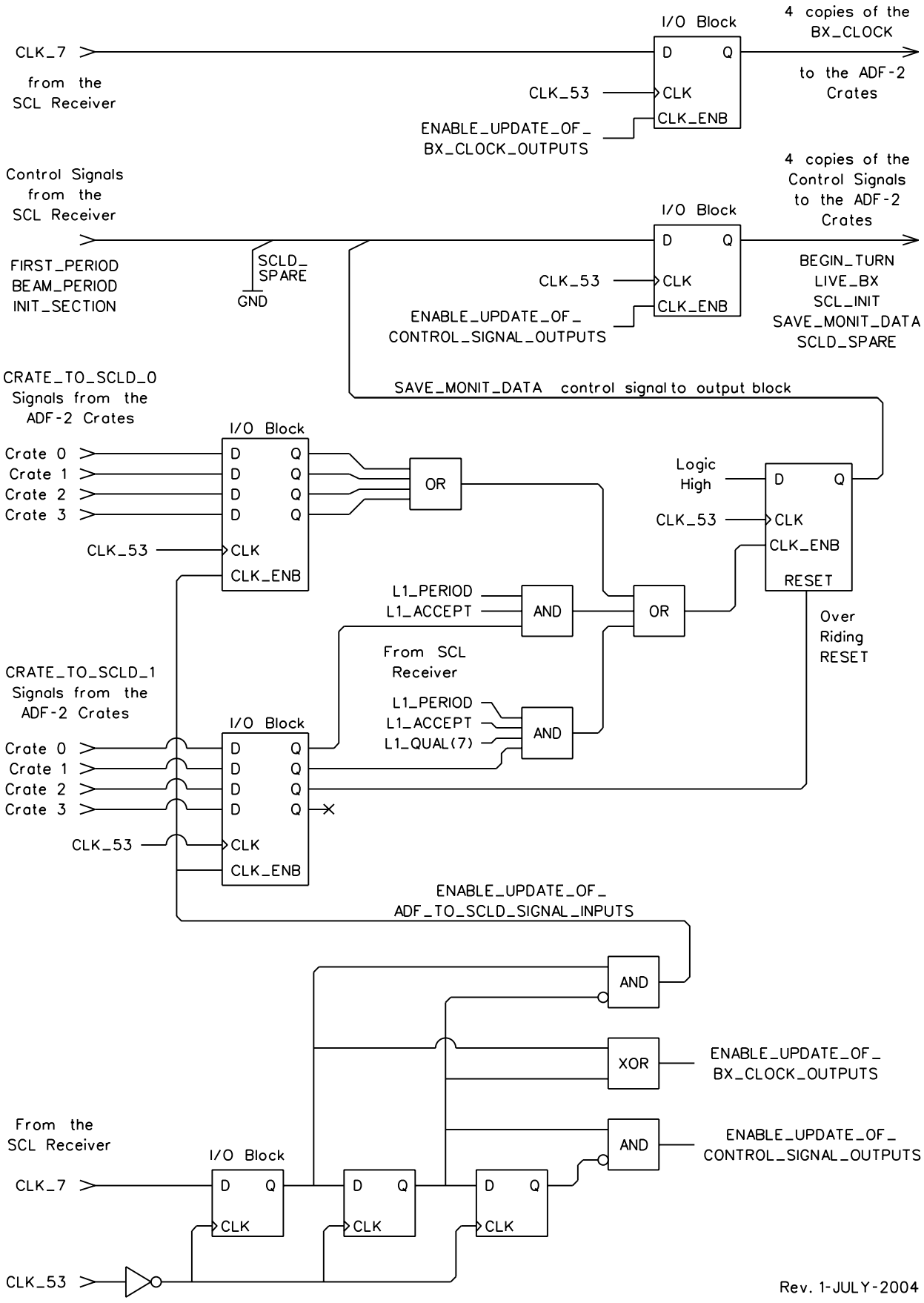

Rev. 1-JULY-2004