PMT ADC - Clocks, Control, & Output Links

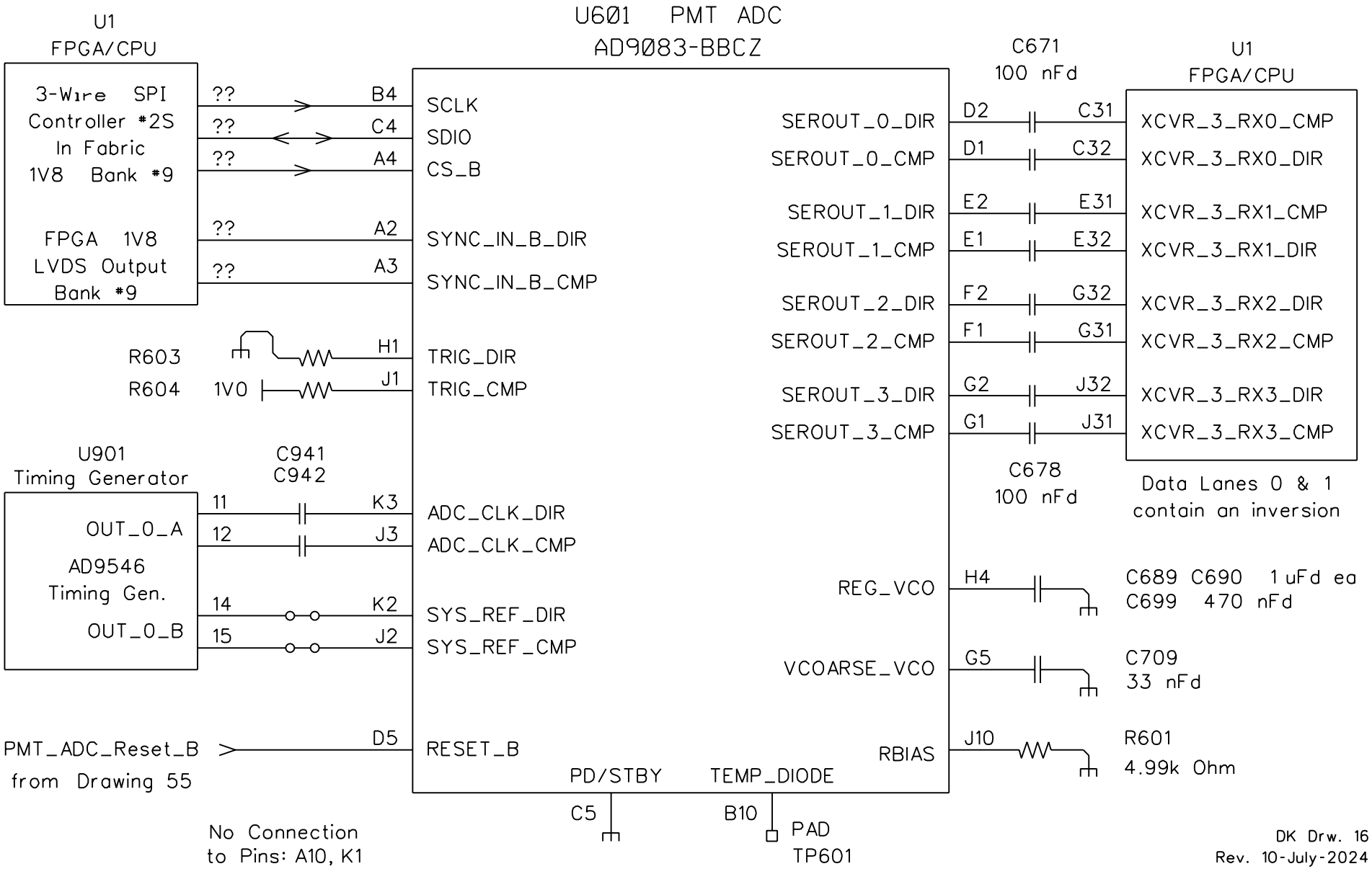

DK Drw. 16
Rev. 10-July-2024