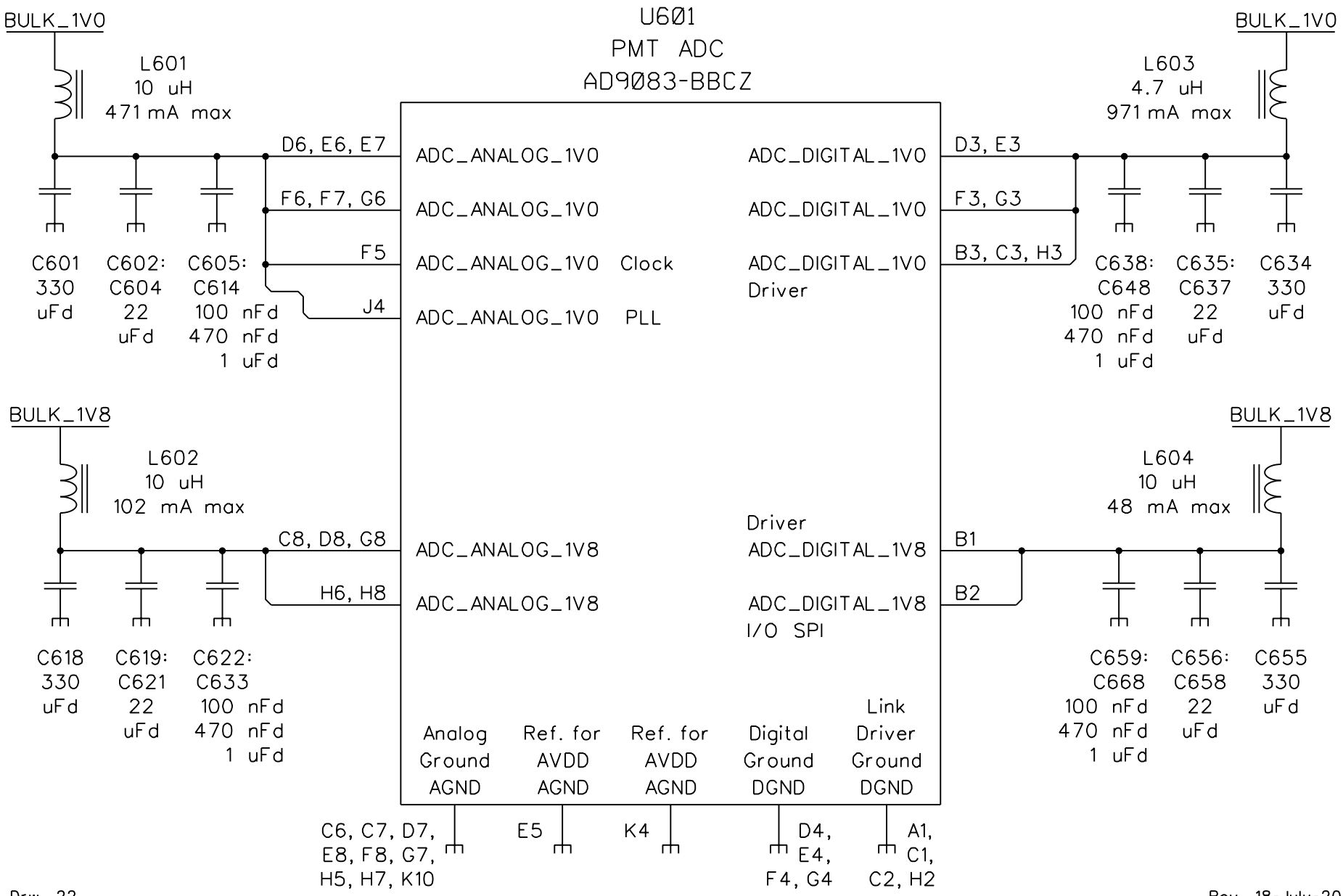PMT ADC - Power and Ground