DK Board's I2C Buses

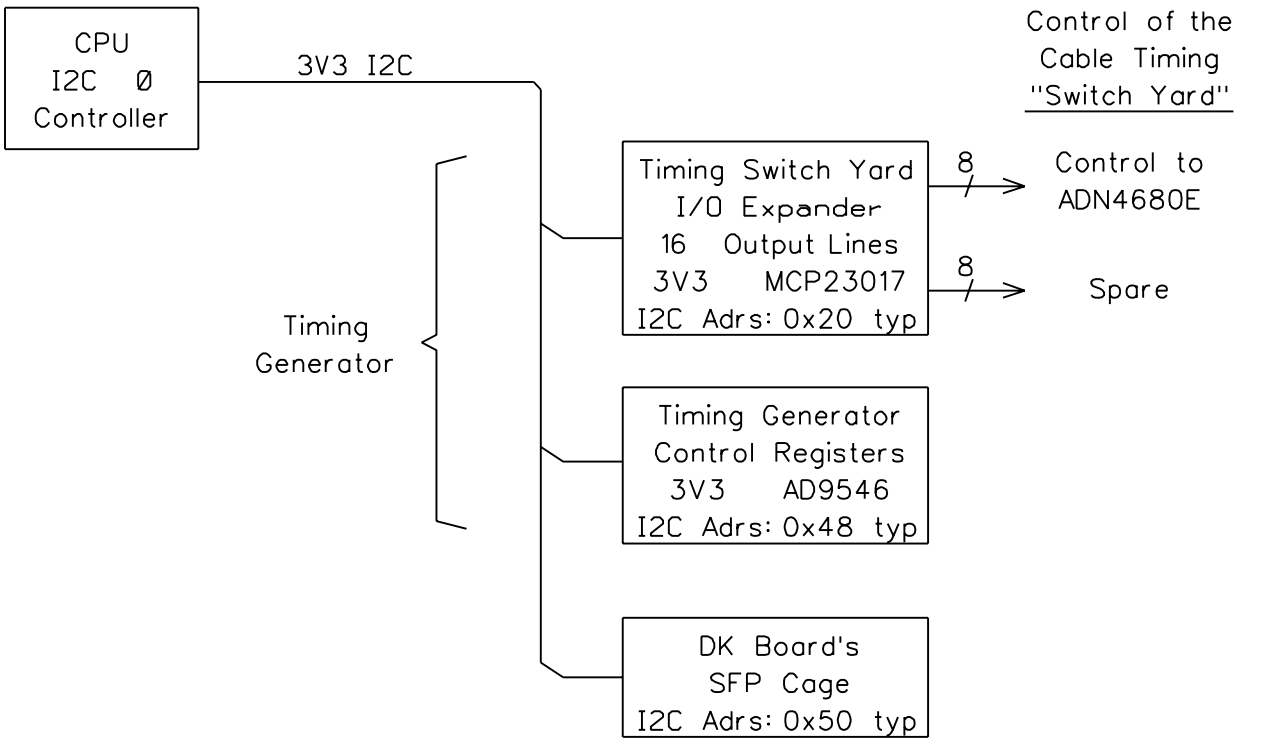

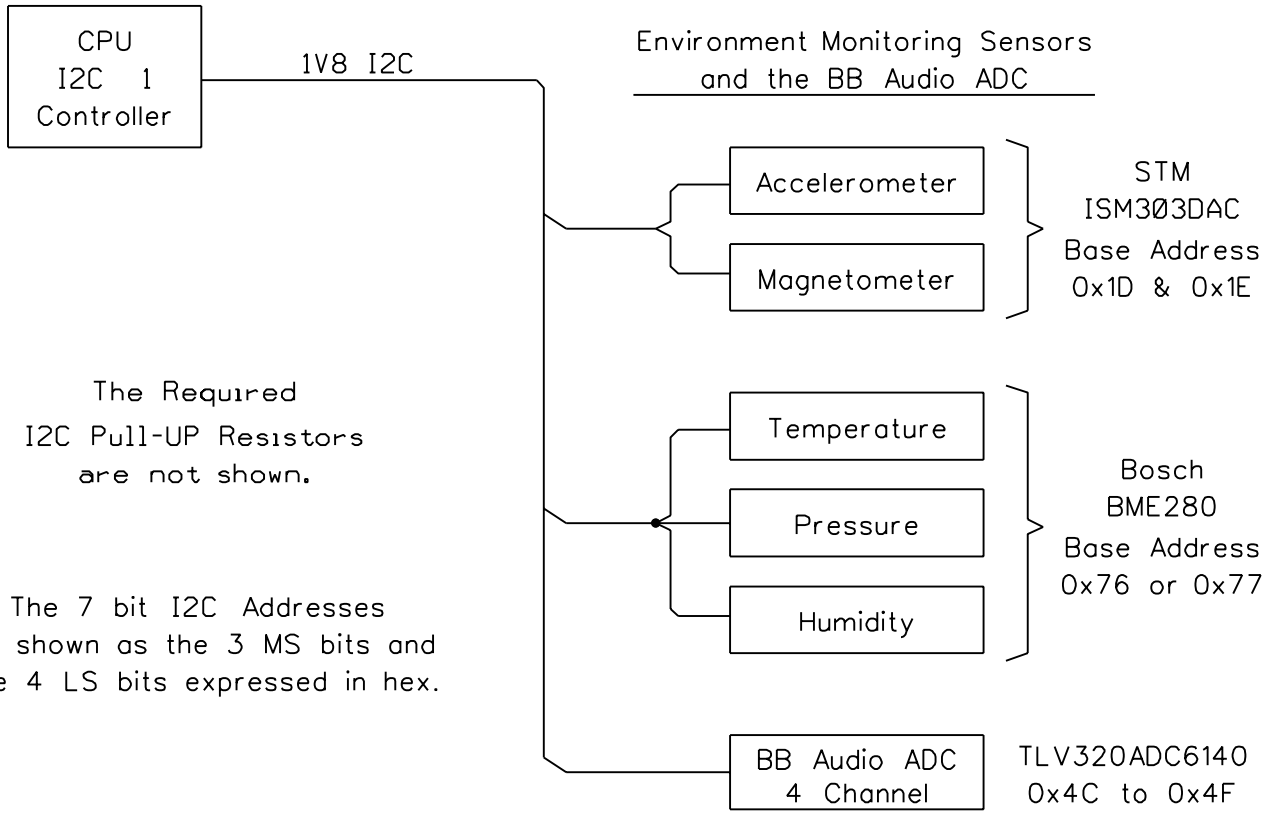

The Required
I2C Pull-UP Resistors
are not shown.

The 7 bit I2C Addresses
are shown as the 3 MS bits and
the 4 LS bits expressed in hex.