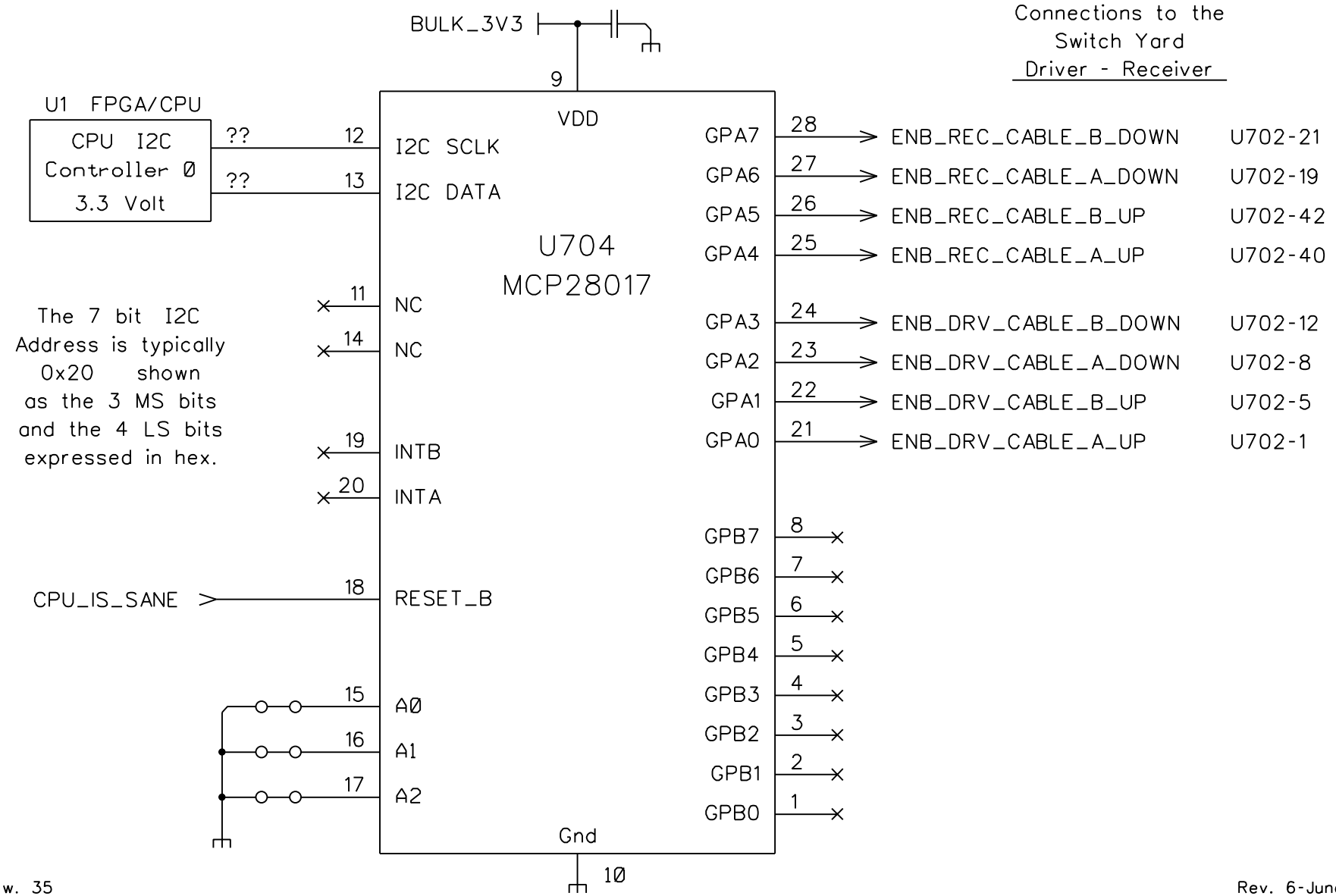Switch Yard I2C I/O Expander