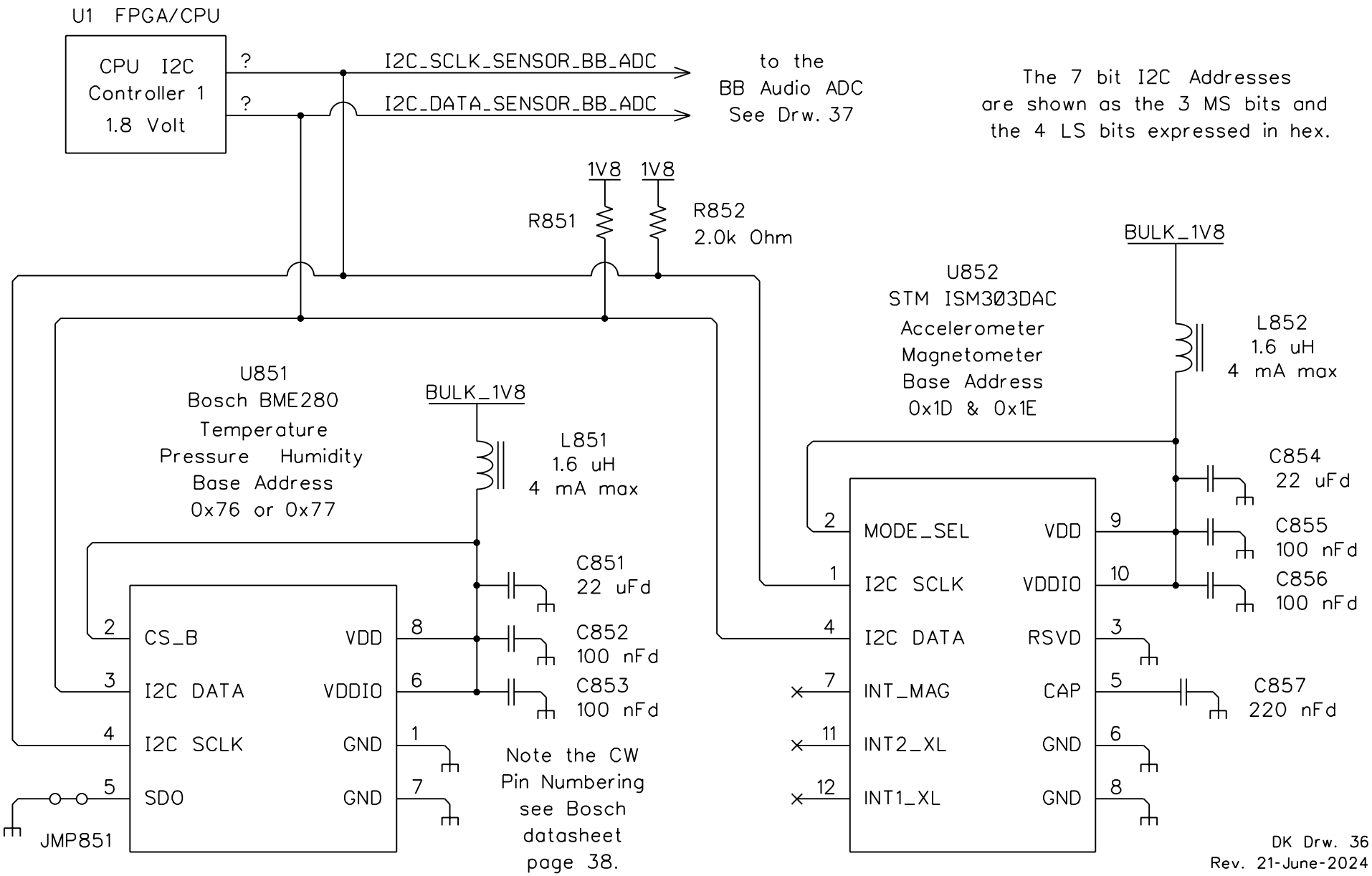Environmental Sensors