BB Audio ADC

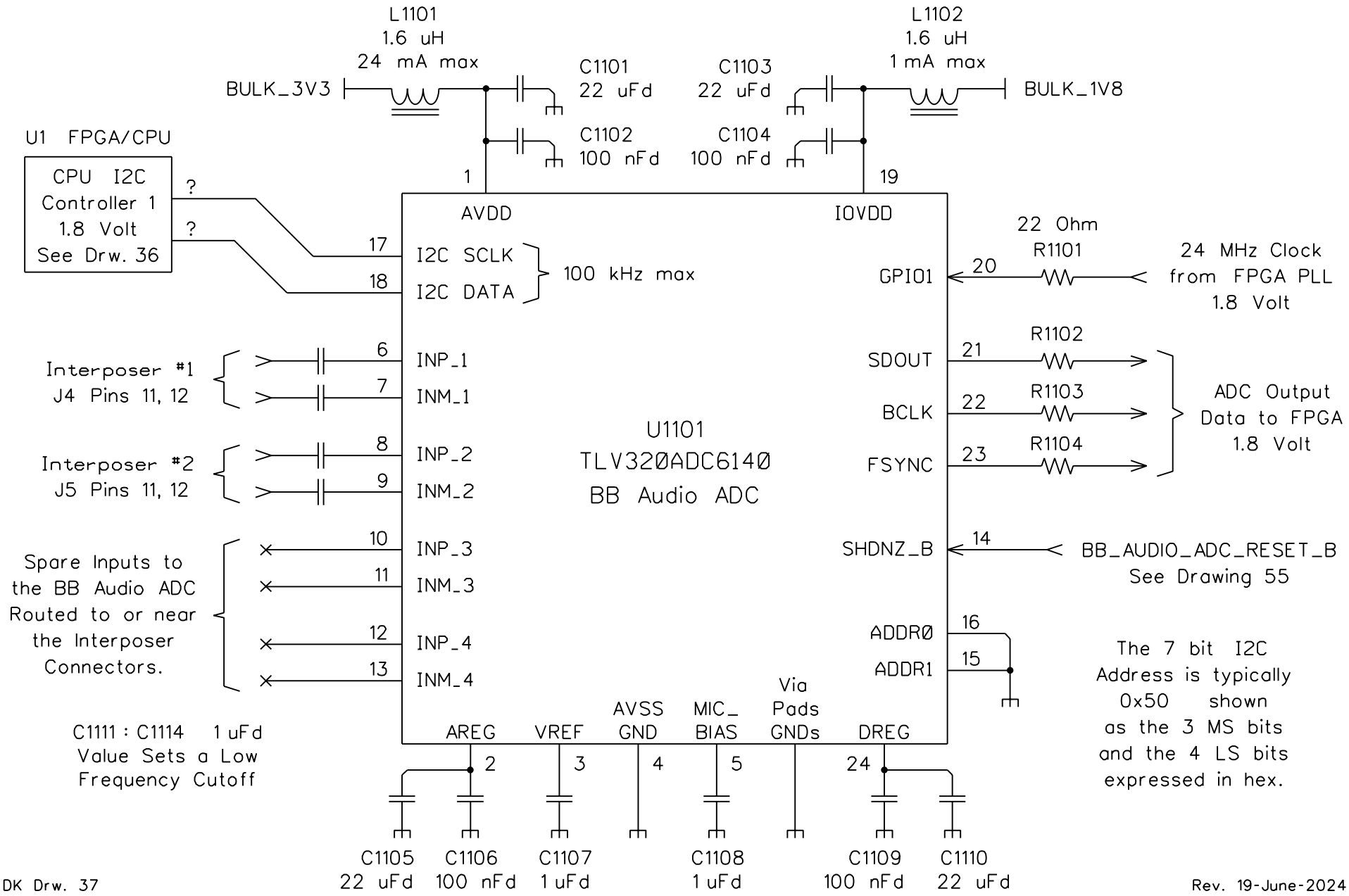

DK Drw. 37

Rev. 19-June-2024