DK Board Reset Circuits Page 1

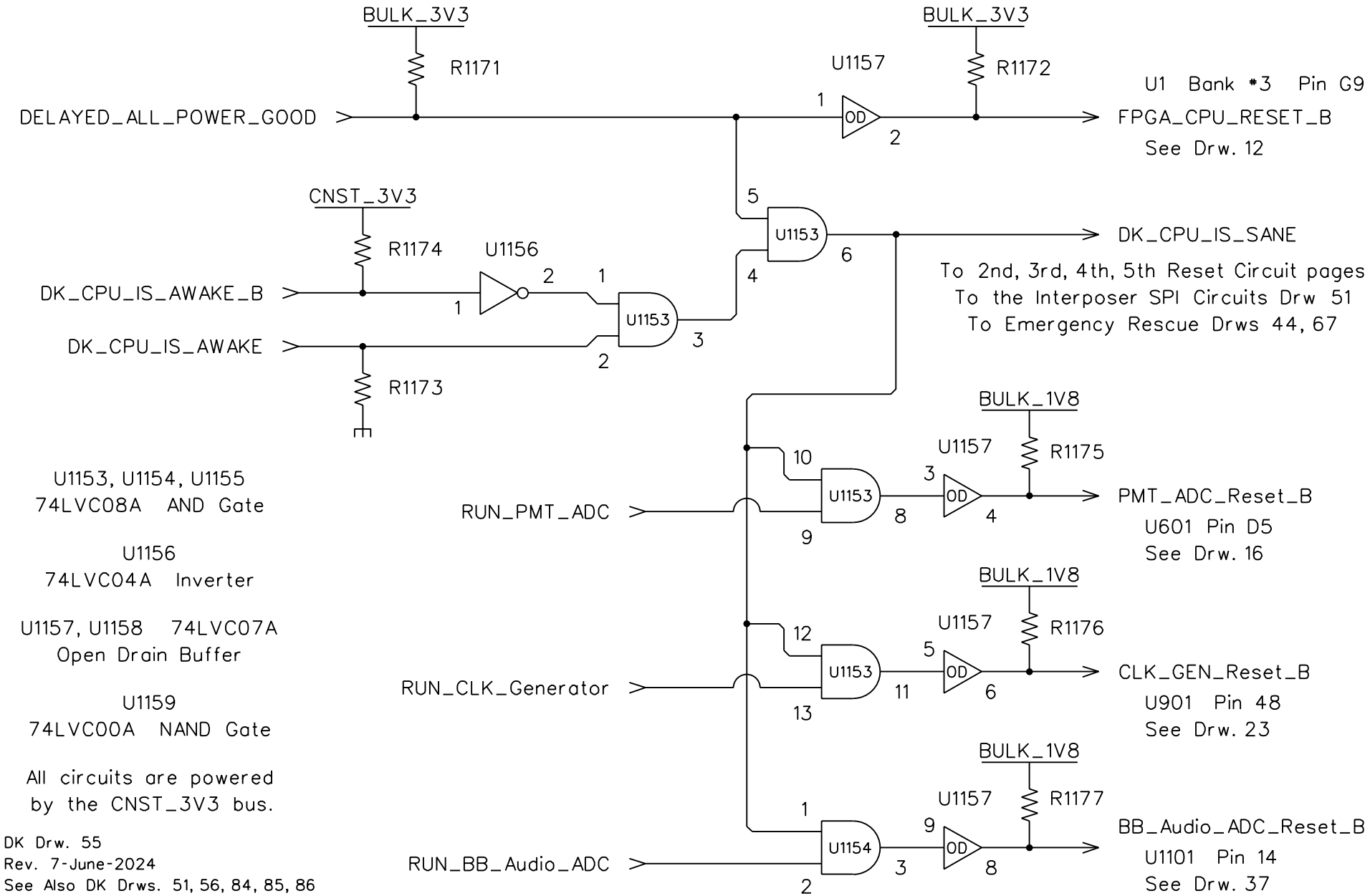

U1153, U1154, U1155
74LVC08A AND Gate

U1156
74LVC04A Inverter

U1157, U1158 74LVC07A
Open Drain Buffer

U1159
74LVC00A NAND Gate

All circuits are powered
by the CNST_3V3 bus.

DK Drw. 55
Rev. 7-June-2024
See Also DK Drws. 51, 56, 84, 85, 86