CB-Fan Card Front Panel LEDs

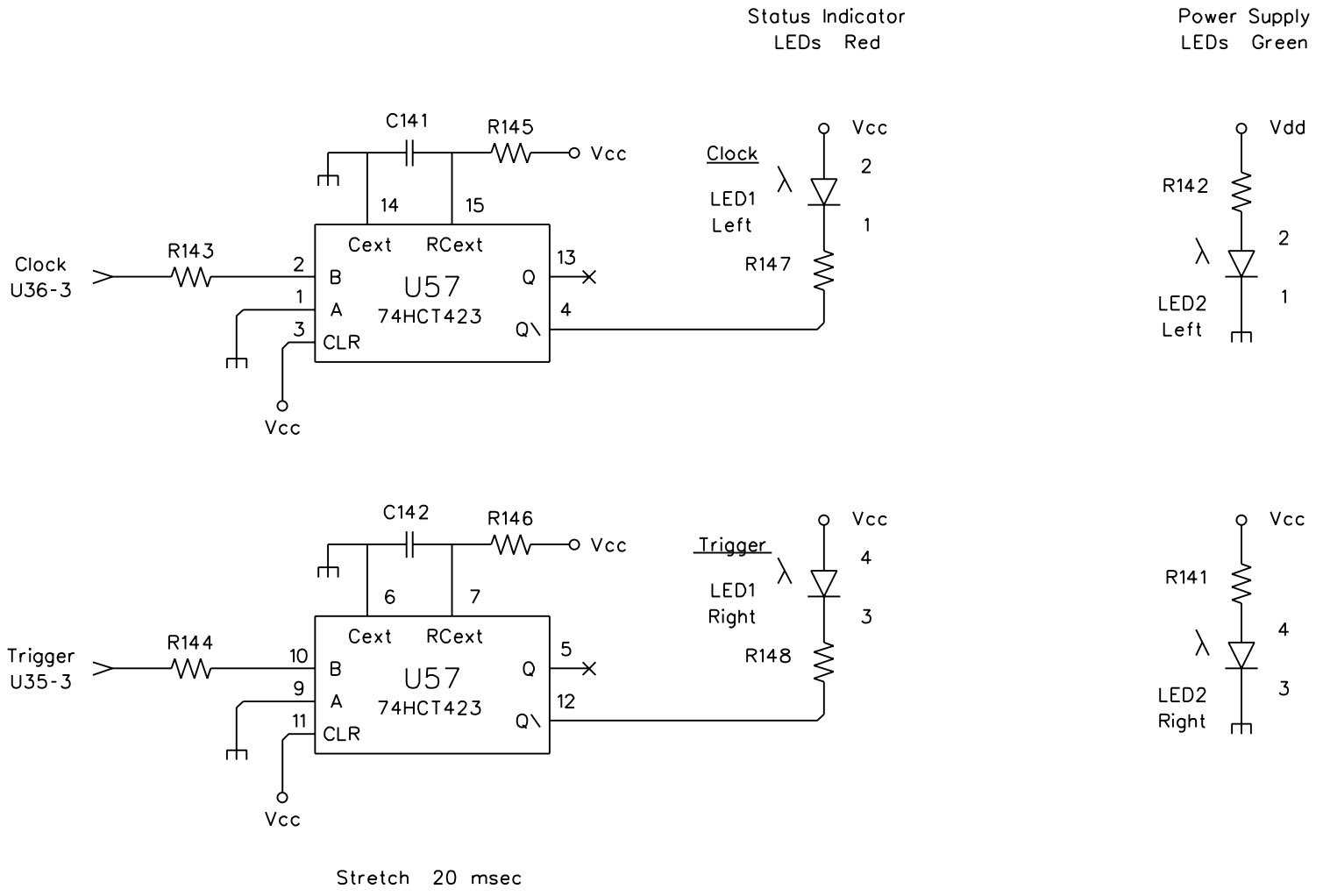

Rev. 13-MAY-2012