# CB-Fan Generic 16 Bit ECL <--> LVDS

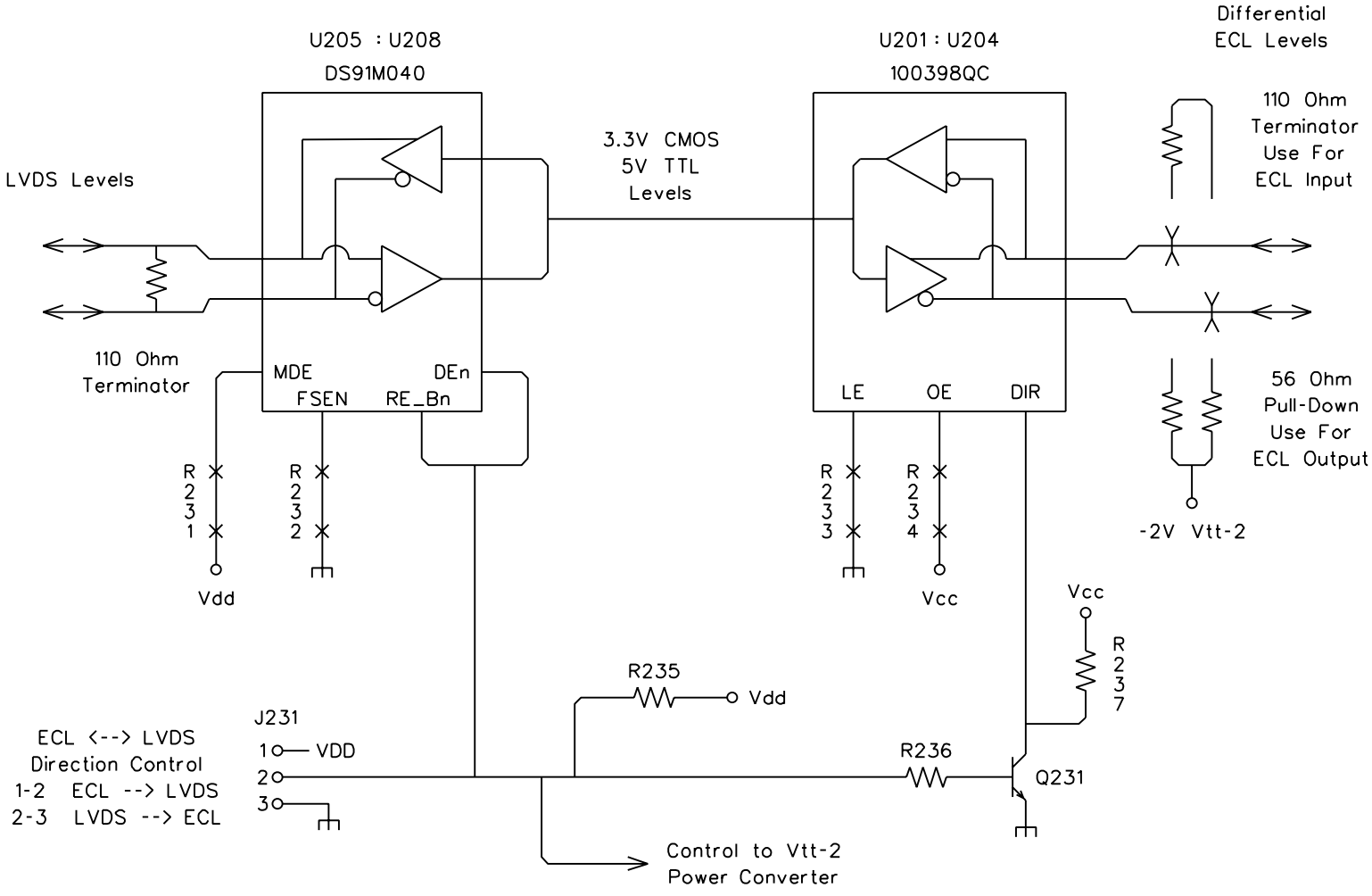


Rev. 13-MAY-2013