CB-Fan Card Power Entry

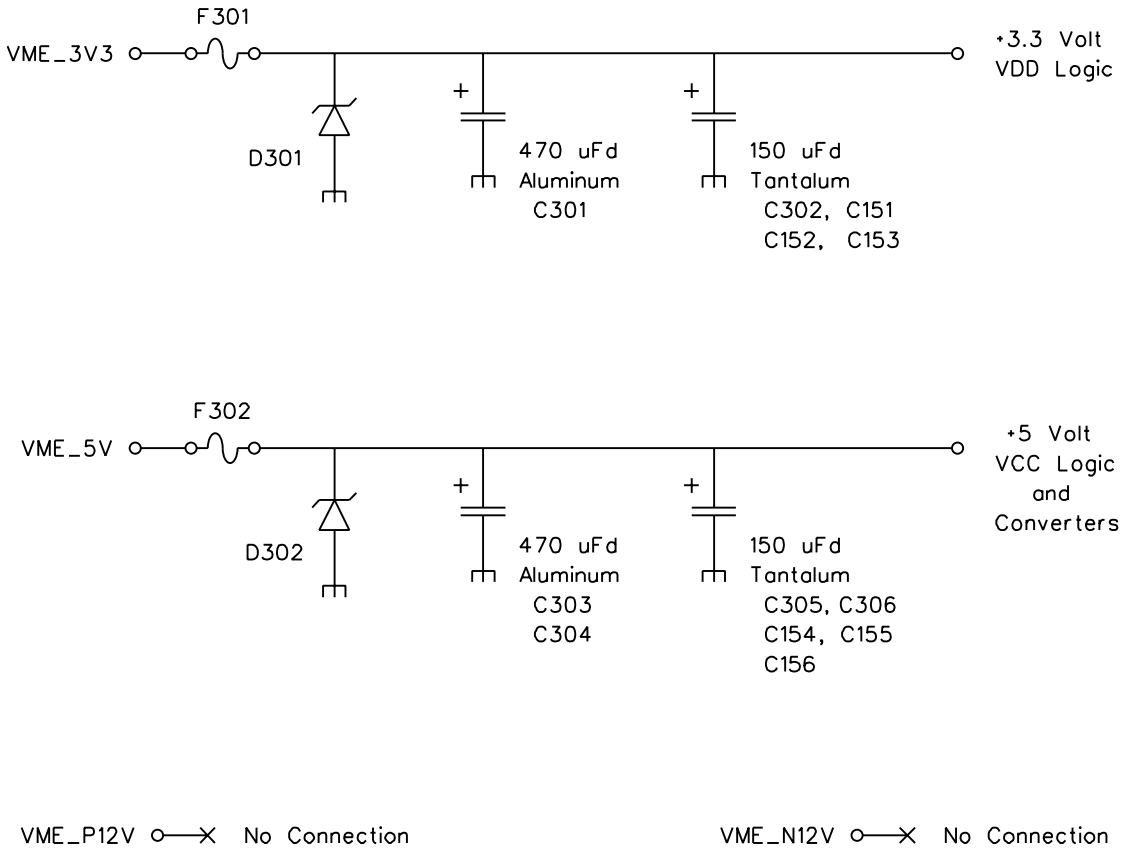

Rev. 12-MAY-2012