GPS Clock and Its Fanout

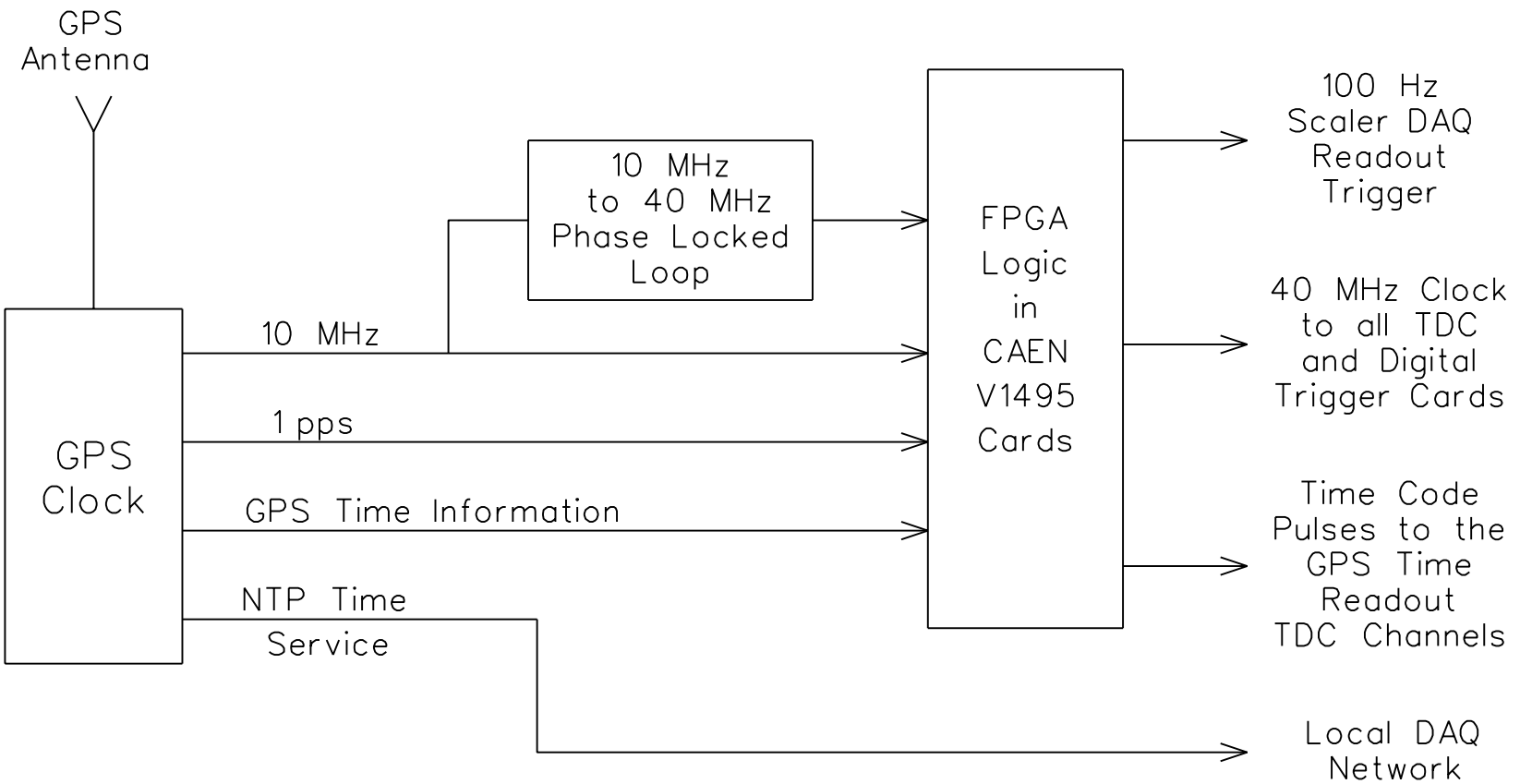

Rev. 29-Mar-2010