16.8 Inch Aluminum Corner Bracket

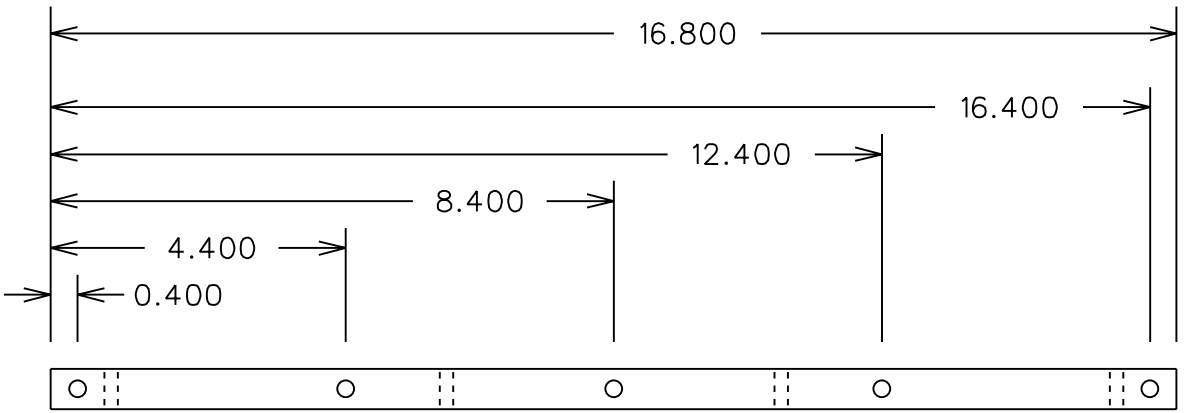

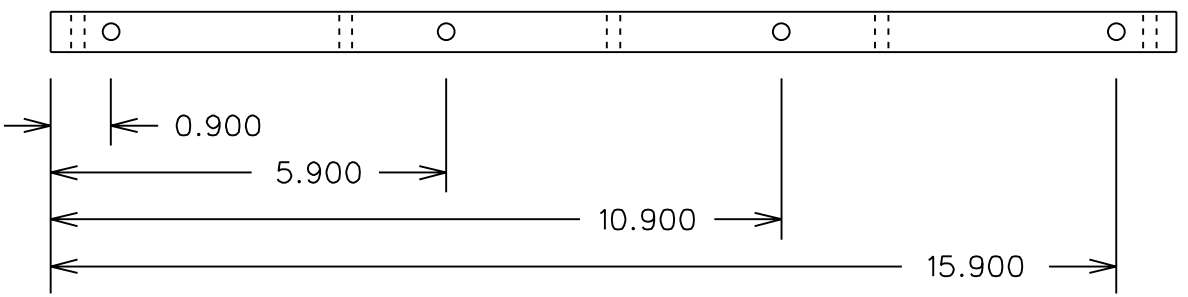

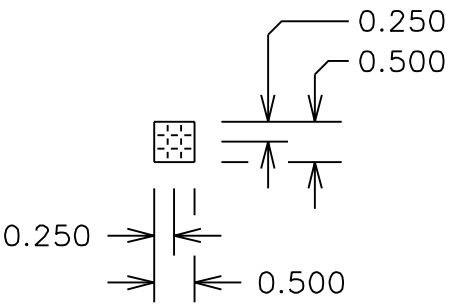

All 9 holes are tapped the whole way through for 10-24 screws.
The accurate relative location of the holes is all that is important.
Overall length +- 50 mils is fine.
Material: ½" x½" Aluminum Bar Stock 6061
Please make 8 of these bars.
This part is symmetric about its center.

Inner Aluminum Preamp Box
Rev. 25-JAN-2008