Wire Bias Voltage Input Filter

as Installed for the PAB Bo LArTPC

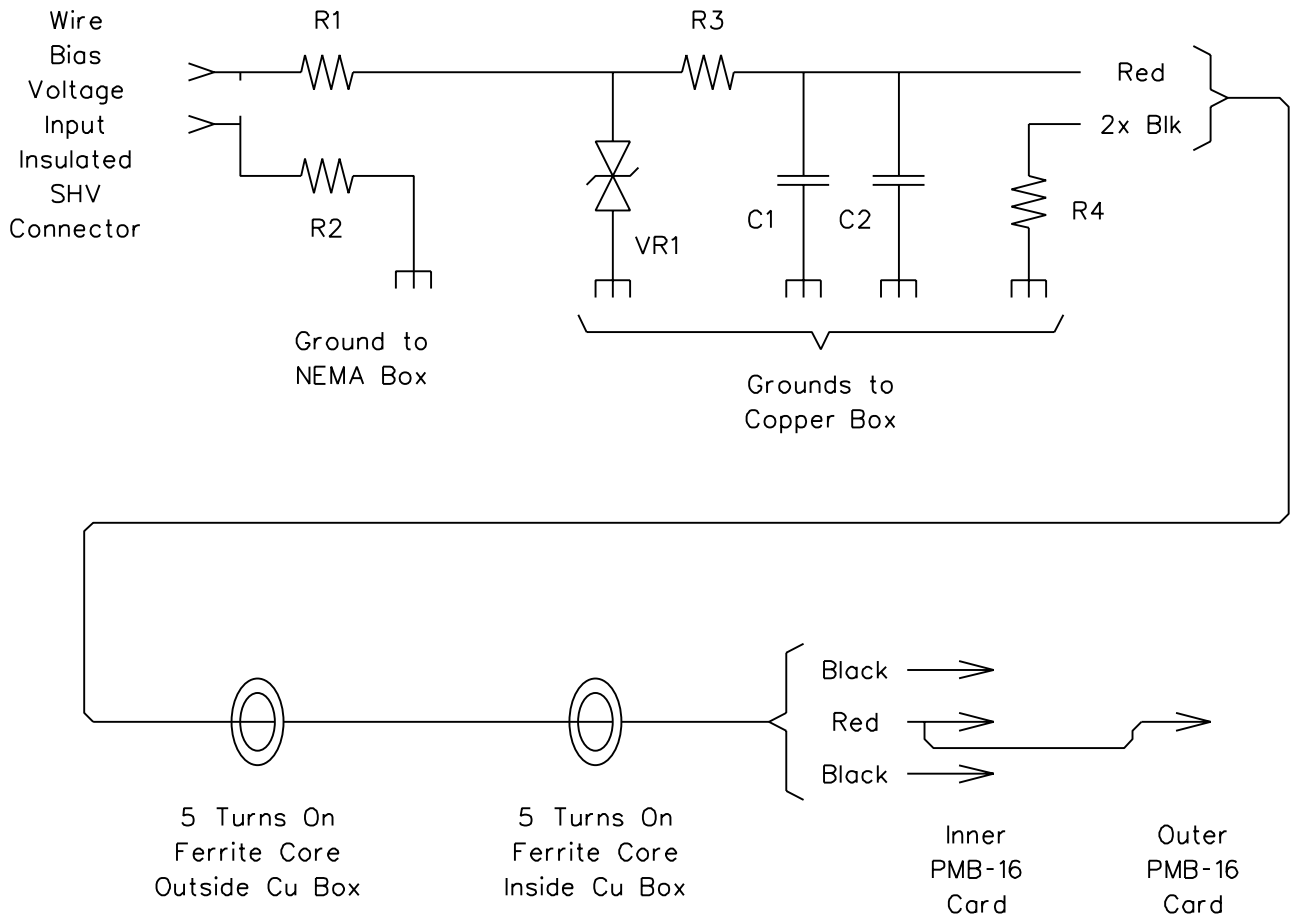

Each Bias Voltage
Input Filter Feeds
Two PMB-16 Cards

R1	20k Ohm	C1, C2	0.47 uFd 1000V
R2, R4	200 Ohm	Varistor	600V
R3	50k Ohm	Core	Ferroxcube 3E2A

Rev. 13-APR-2007