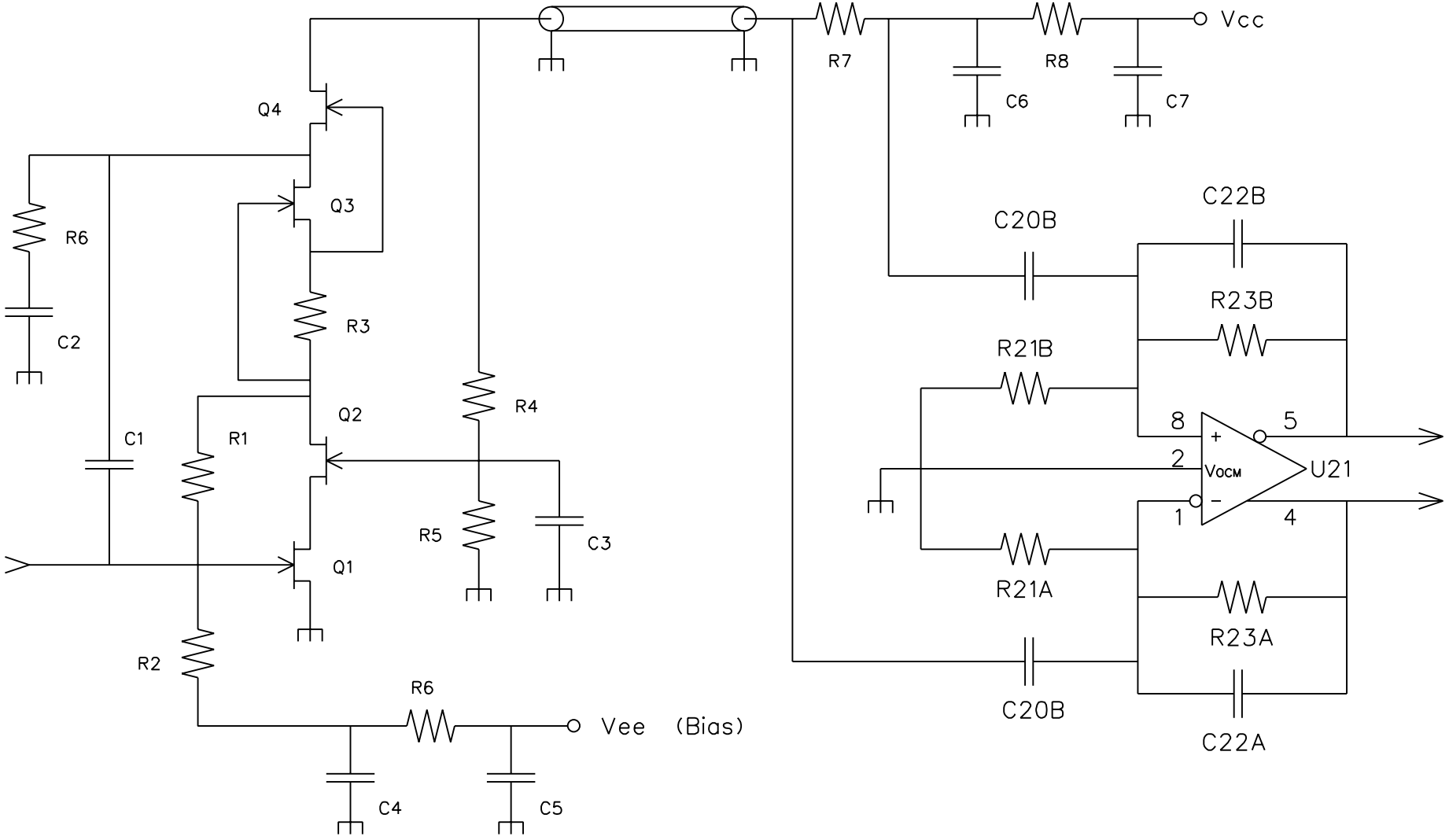Cold Preamplifier