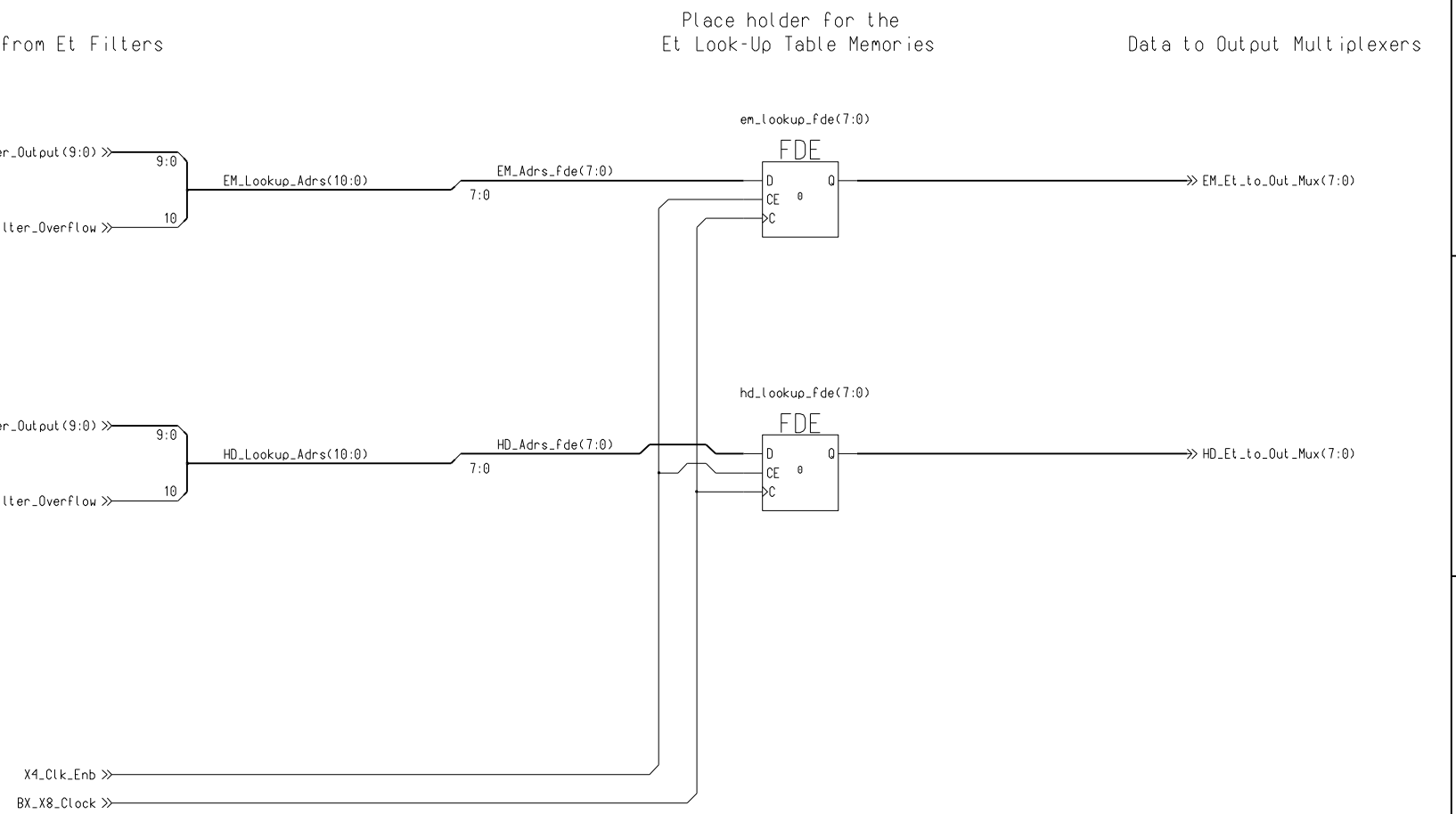

Et Look-Up Page Place Holder for LArTPC
Trigger Tower Cell of Data Path Page 7 of 9

Engineer: Edmunds	MICHIGAN STATE UNIVERSITY D0 Run II Upgrade Run IIB L1 Calorimeter Trigger
Drawn by: Librarian	
R&D CHK:	TITLE: tt_cell for LArTPC Trigger Tower Cell of Data Path D.P. FPGA Design L1
DOC CTRL CHK:	Size: C
MFG ENGR CHK:	4 1 4 A

Changed by:	Date Changed:	Time Changed:	QA CHK:	REV:	Drawing Number:	Page:
Edmunds	Friday 13-JAN-2006	12:00:00				7