3 Box LArTPC DAQ System

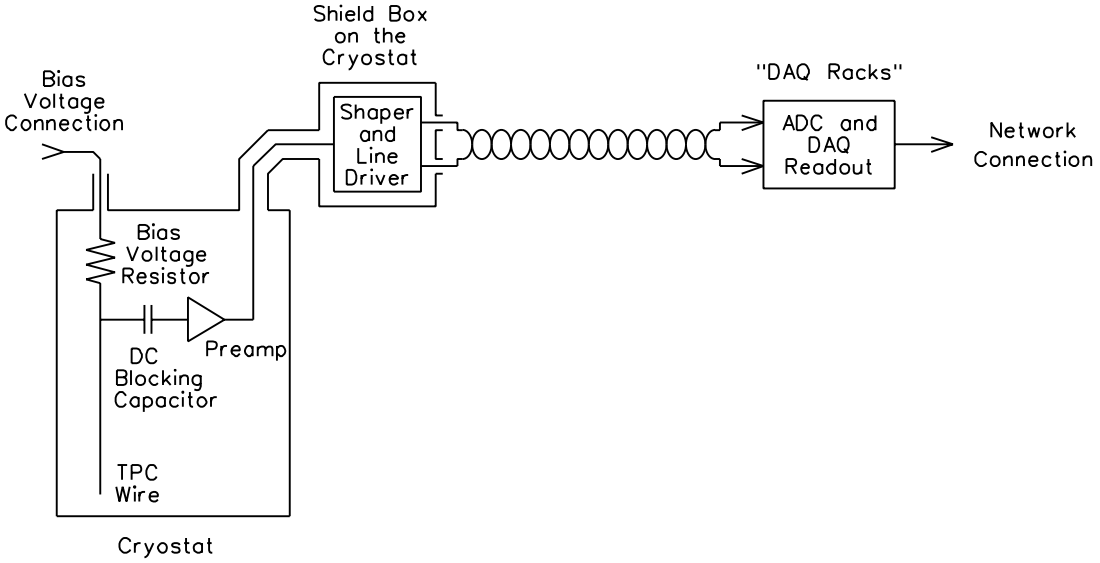

Rev. 17-FEB-10