Cold Digital Control Signal Receiver

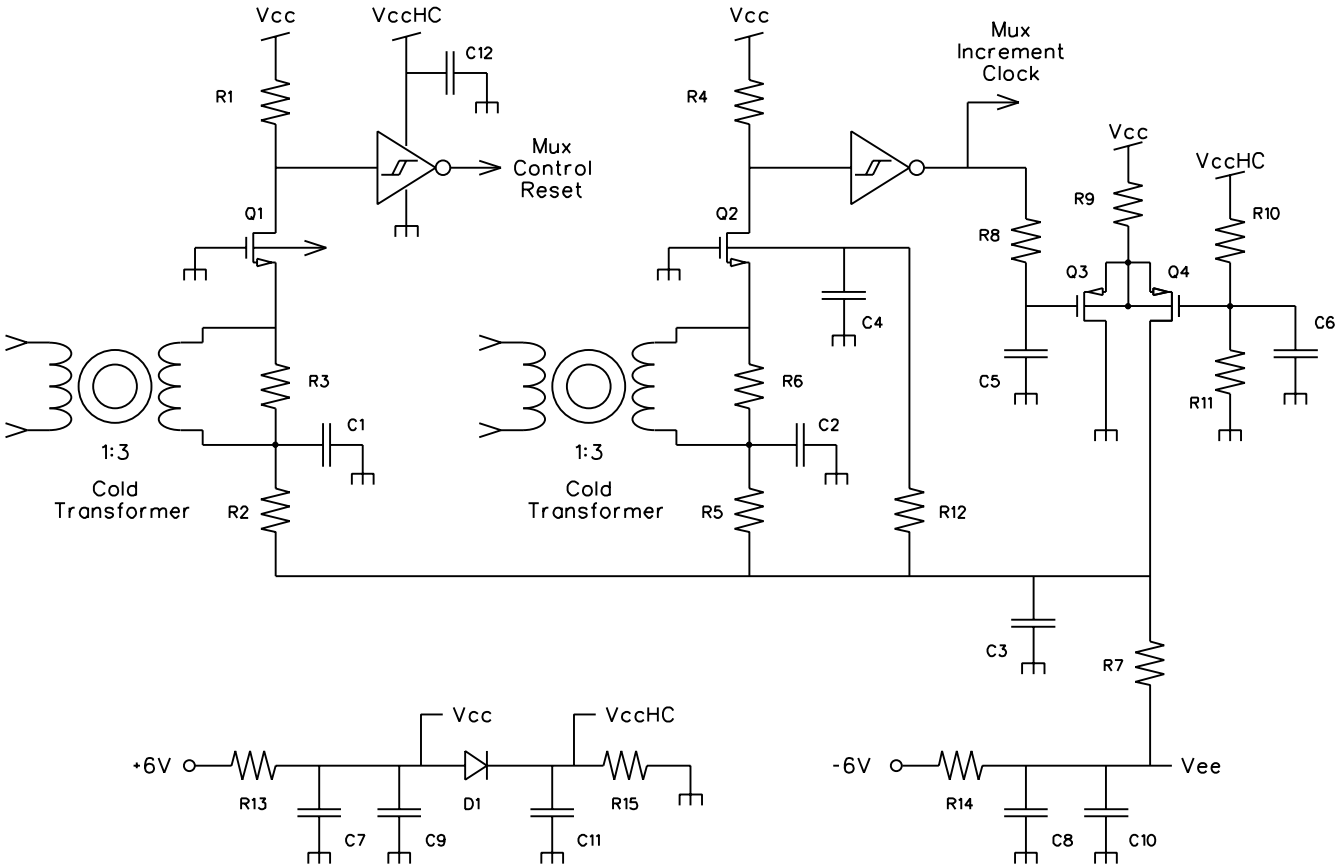

Rev. 22-OCT-09