Cold Multiplexer Digital Control

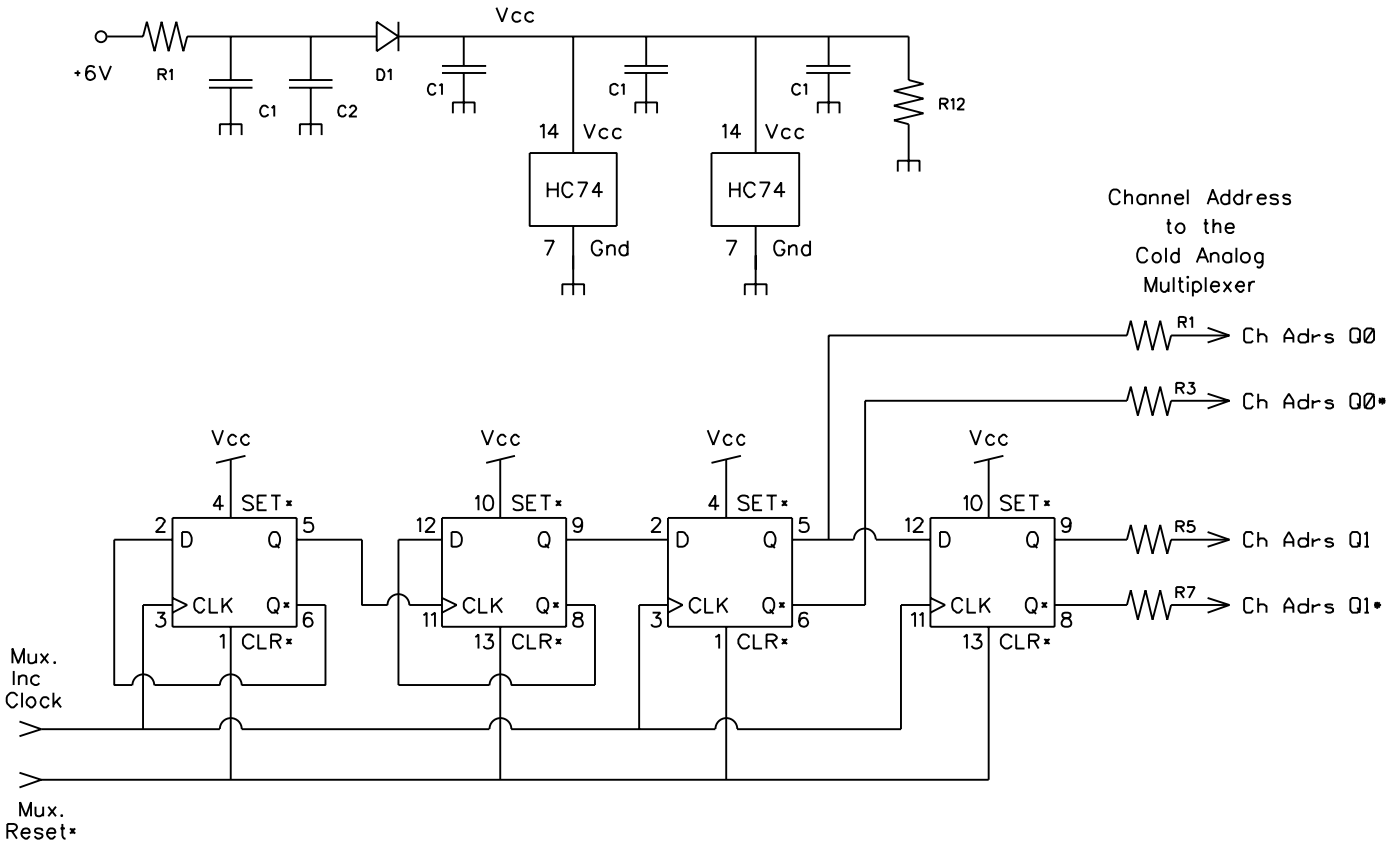

Rev. 26-OCT-09