Cold 3-Pole Filter

R13 = 6.8k Ohm
R14 = 800 Ohm
R15 = 6.8k Ohm
R16 = 800 Ohm

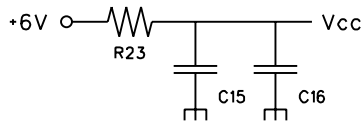

C15 = 47 nFd
C16 = 47 nFd

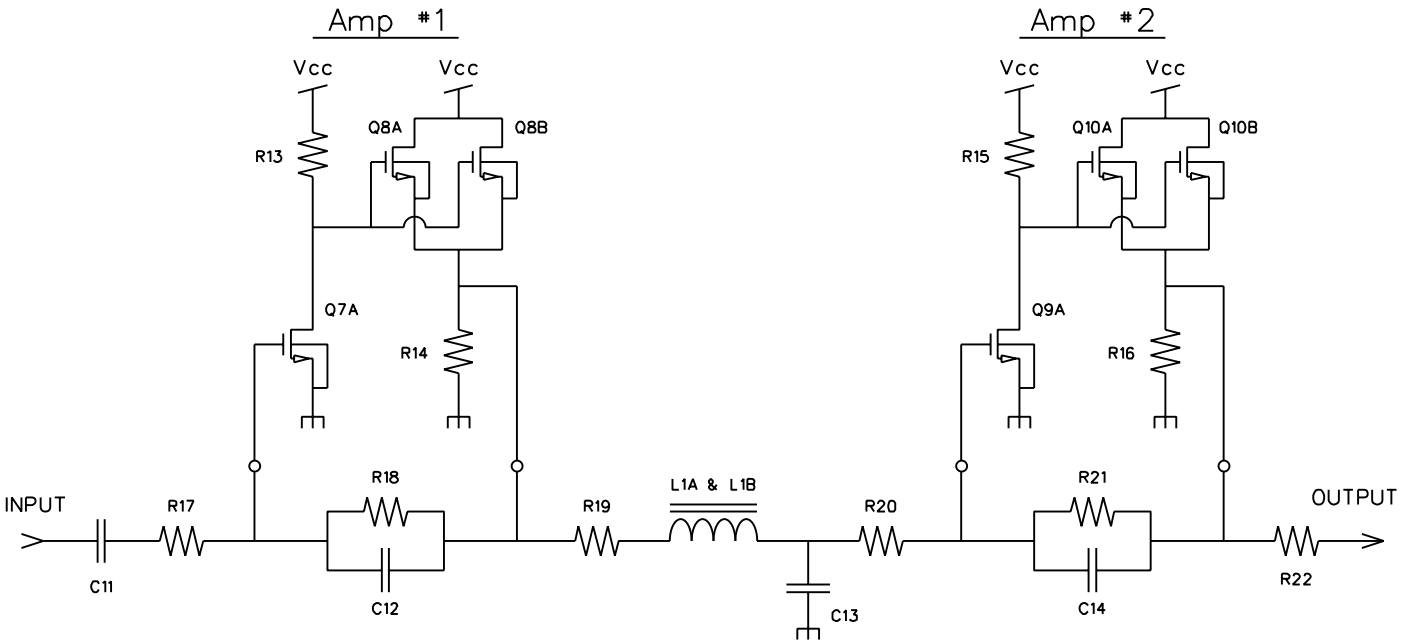

R17C11 1.64 usec
R17 = 2k Ohm
C11 = 820 pFd

R18C12 560 nsec
R18 = 10k Ohm
C12 = 56 pFd

R19 = 845 Ohm
L1 = 560 uH
C13 = 2.2 nFd
R20 = 10k Ohm

R21C14 500 nsec
R21 = 49.9k Ohm
C14 = 10 pFd

R22 =
100 Ohm

Rev. 15-DEC-09