Cold Analog Multiplexer

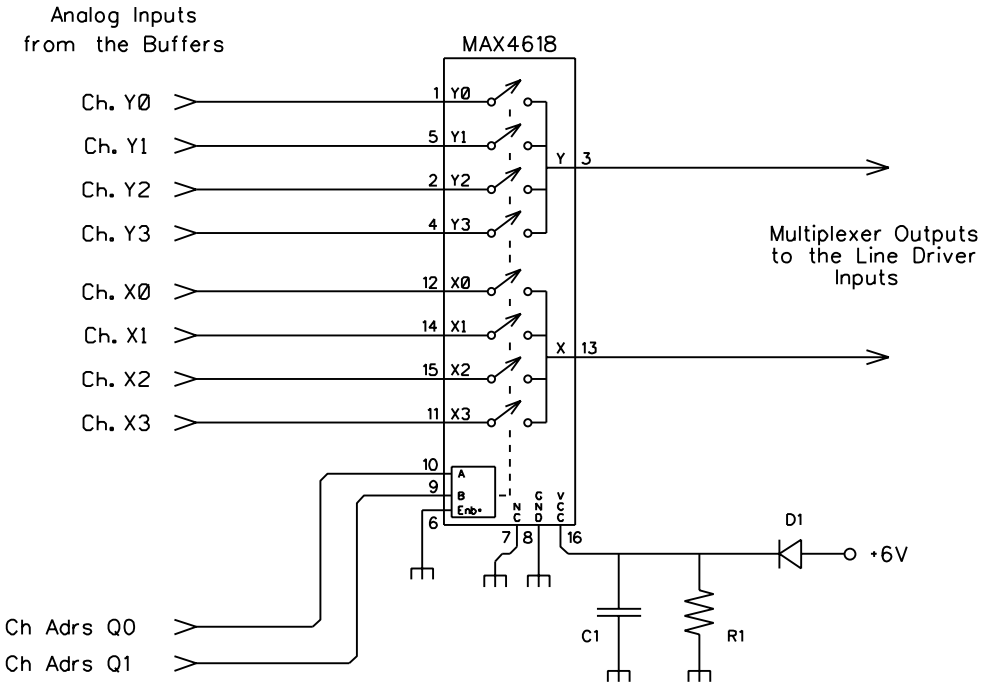

Rev. 29-OCT-09