Cold MOSFET Preamplifier

R1 = 100M Ohm
R2 = 375 Ohm
R3 = 18.6k Ohm
R4 = 100k Ohm
R5 = 27k Ohm
R6 = 1.0k Ohm
R7 = 2.0k Ohm
R8 = 100 Ohm
R9 = 100 Ohm
R10 = 100 Ohm
R11 = 100 Ohm on CMB-16
R12 = 10 Ohm on CMB-16

C1 = 1.8 pFd
C2 = 10 nFd
C3 = 10 nFd
C4 = 47 nFd
C5 = 47 nFd
C6 = 47 nFd
C7 = 47 nFd
C8 = 47 nFd
C9 = 47 nFd on CMB-16
C10 = 47 nFd on CMB-16

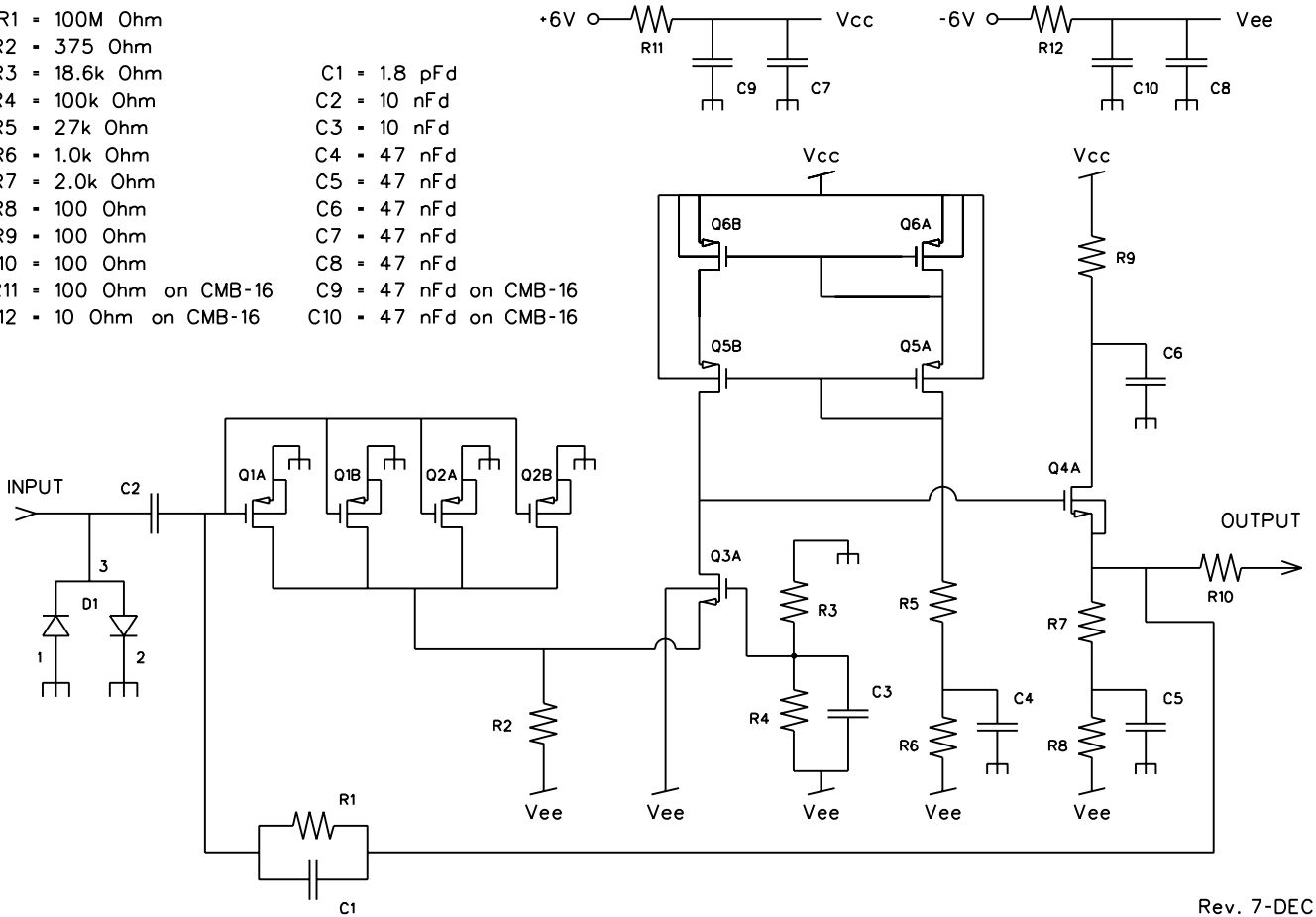

Rev. 7-DEC-09