Warm Digital Control Signal Driver

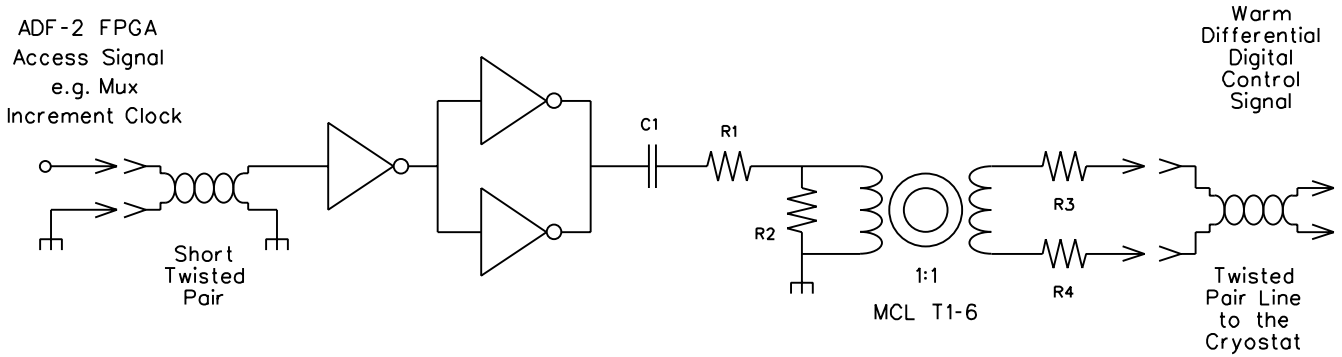

R1 = 412 Ohm
R2 = 51 Ohm
R3, R4 = 25 Ohm
C1 = 10 nFd

Rev. 17-SEPT-09