M20, M21 and M33 RIGID FRAME
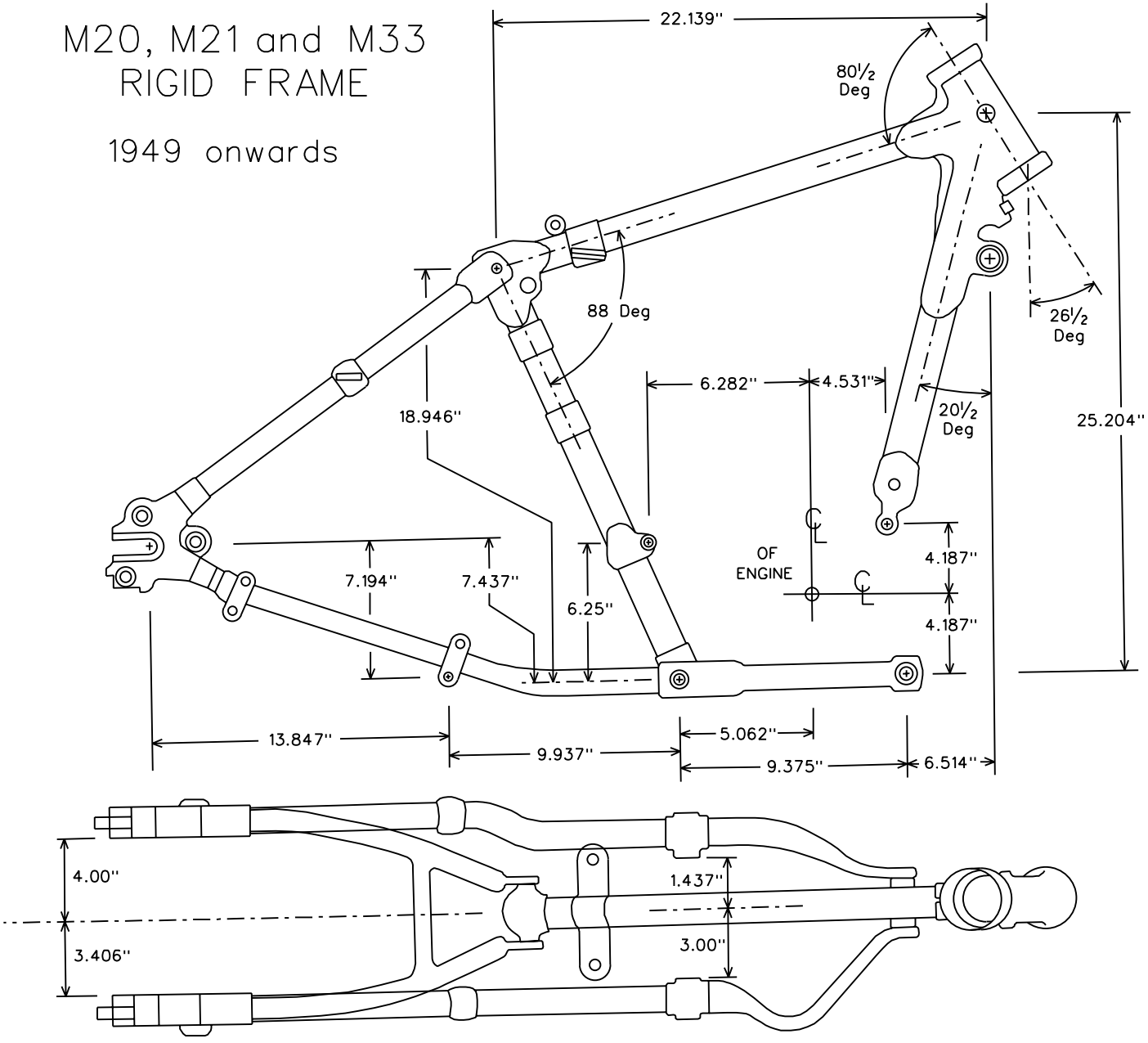
1949 onwards