Simulation of Quantum Design "Internal" Feedback

Reference Designators Match Designators on the QD Feedback Card.

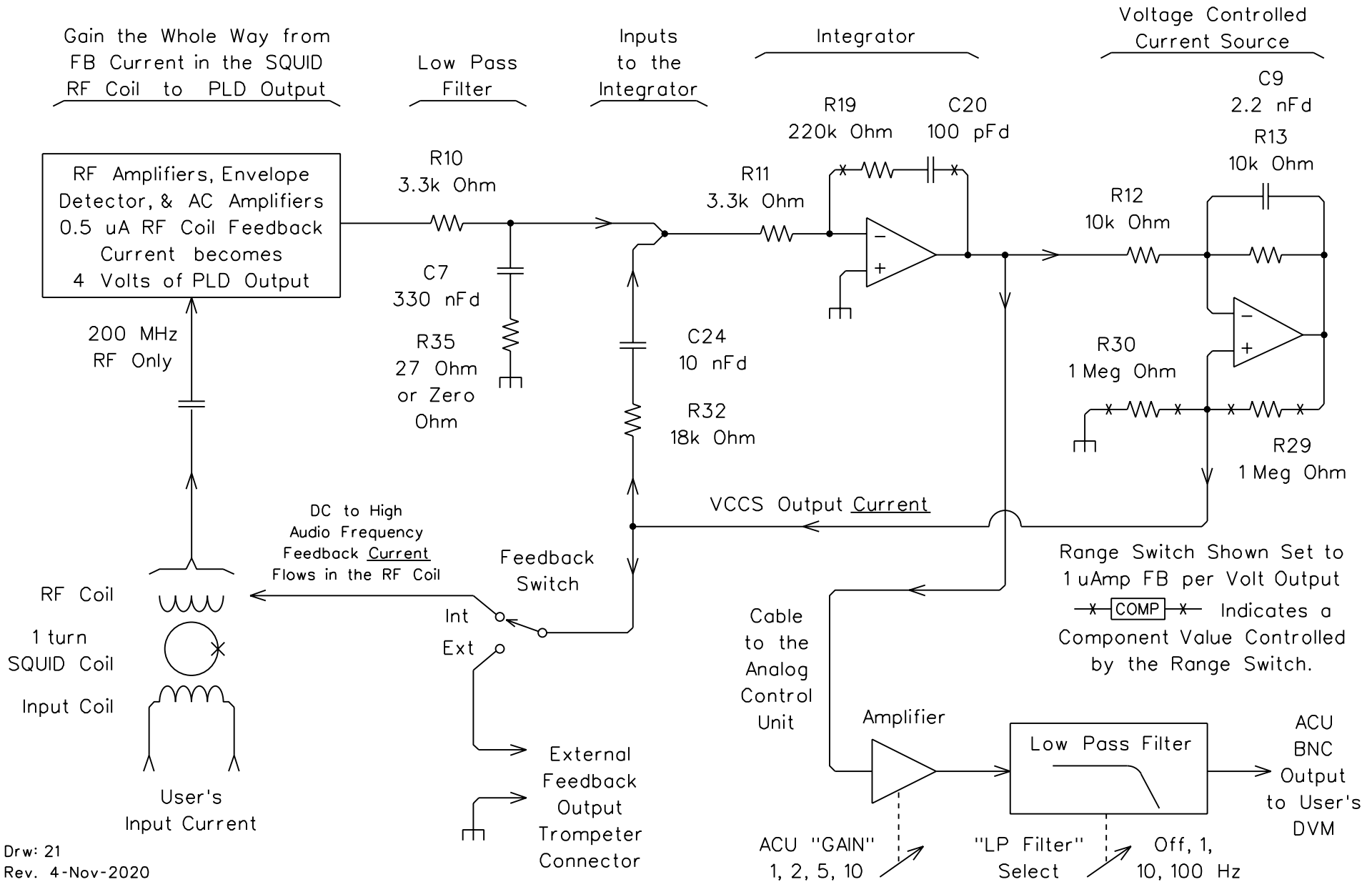

Drw: 21
Rev. 4-Nov-2020