ITC Scintillator Update

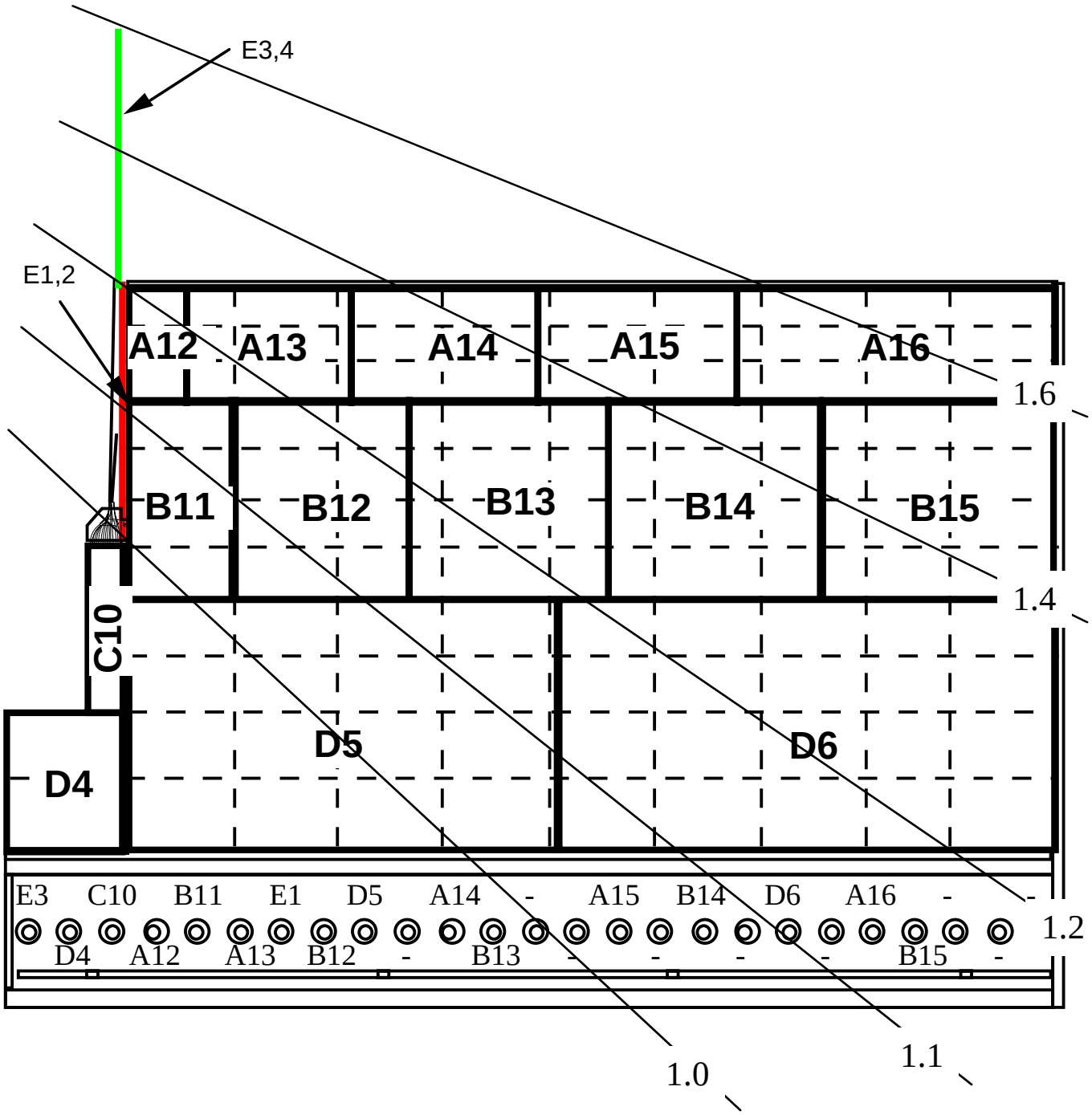

ATLAS TileCal
General Meeting
Feb.18, 2003

R. Miller
MSU

Gap Scintillator (E1, E2, C10)

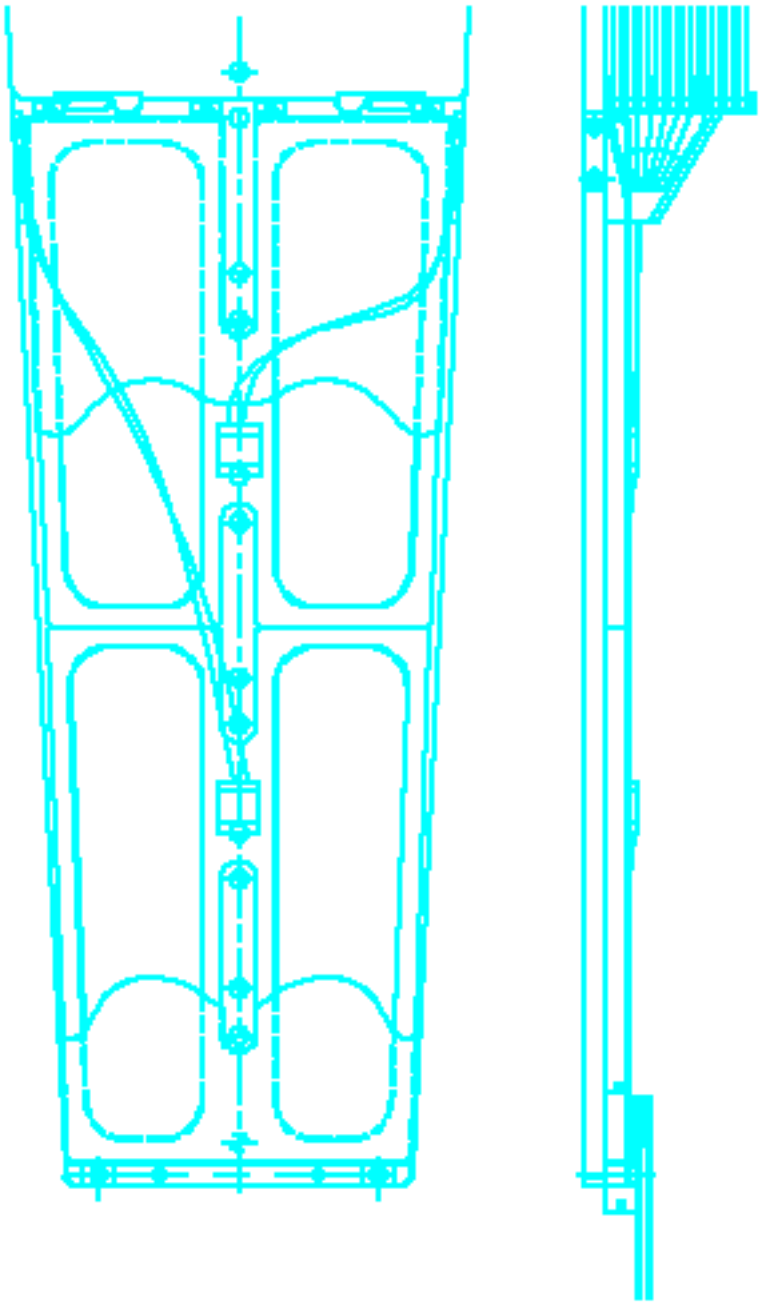

R. Miller
MSU

Crack Scintillator (E3, E4)

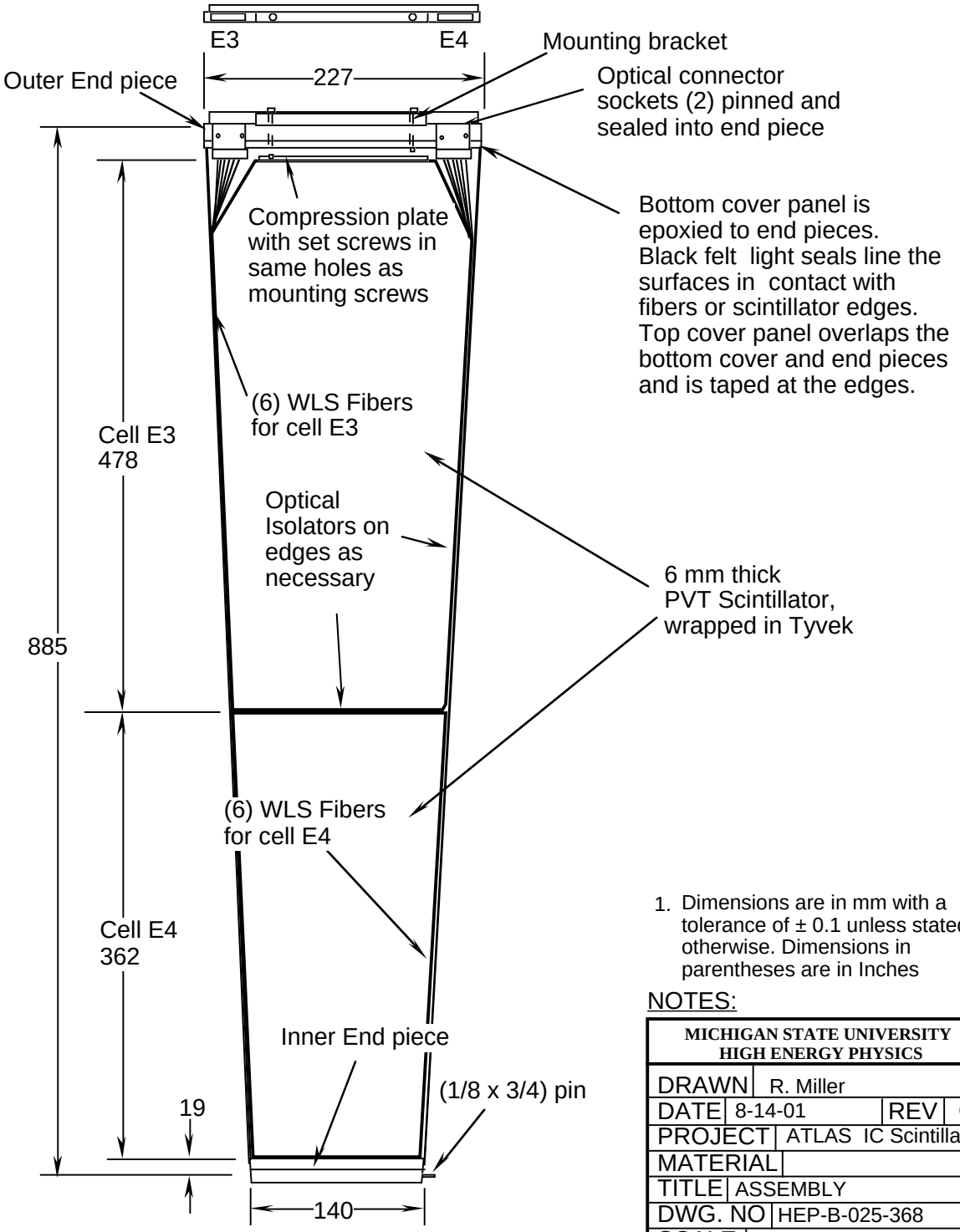

1. Dimensions are in mm with a tolerance of ± 0.1 unless stated otherwise. Dimensions in parentheses are in Inches

NOTES:

MICHIGAN STATE UNIVERSITY HIGH ENERGY PHYSICS			
DRAWN	R. Miller		
DATE	8-14-01	REV	C
PROJECT	ATLAS IC Scintillator		
MATERIAL			
TITLE	ASSEMBLY		
DWG. NO	HEP-B-025-368		
SCALE	1:5		

R. Miller
MSU

Mounting Proposal

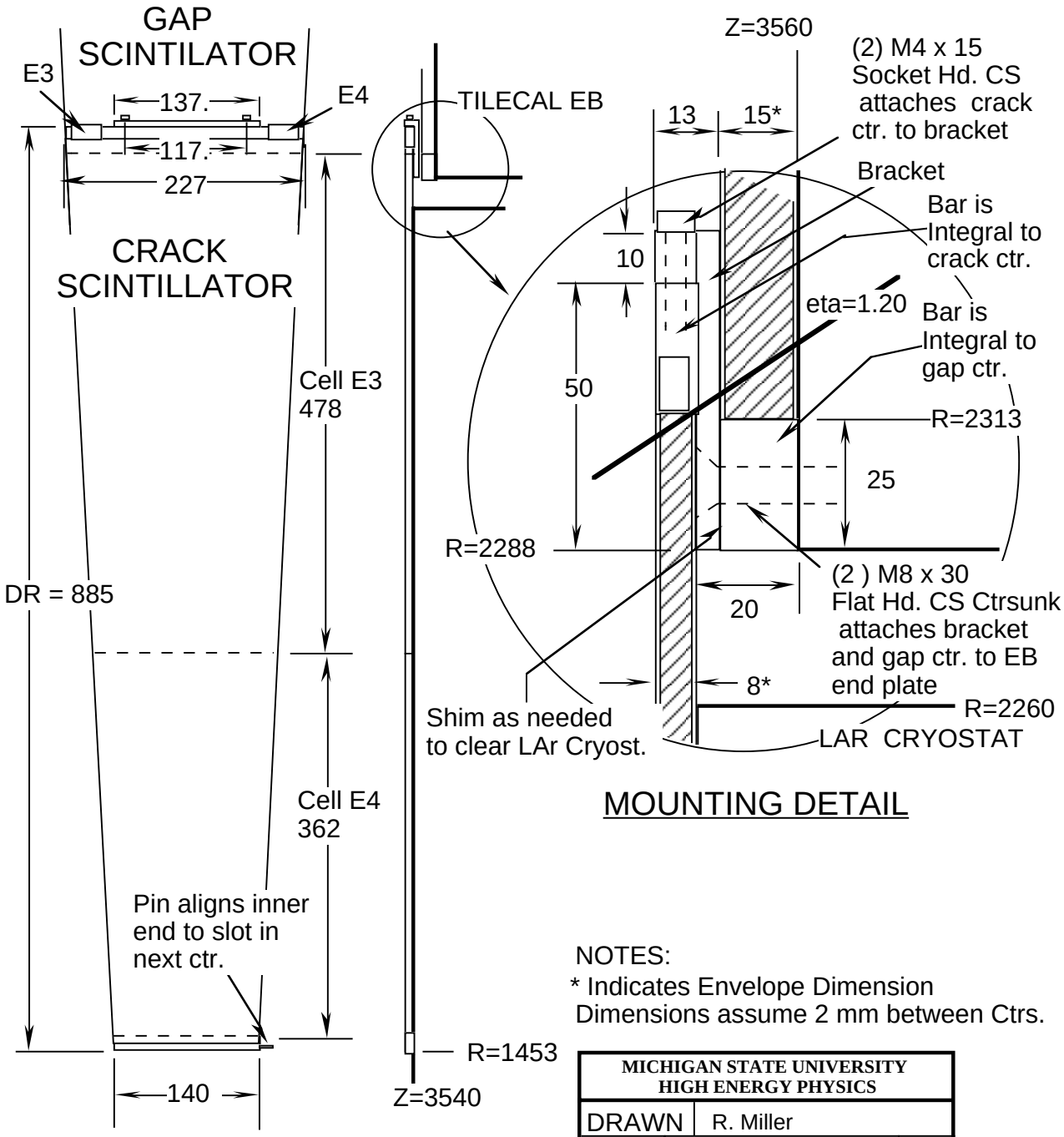

NOTES:
* Indicates Envelope Dimension
Dimensions assume 2 mm between Ctrs.

R-PHI VIEW

R-Z VIEW

MICHIGAN STATE UNIVERSITY HIGH ENERGY PHYSICS			
DRAWN	R. Miller		
DATE	9-21-01	REV	E
PROJECT	ATLAS ITC Scintillator		
MATERIAL			
TITLE	MOUNTING		
DWG. NO	HEP-B-025- 371		
SCALE	1:5		

R. Miller
MSU

Summary of Status

- **Installation of optical fiber assemblies into EB modules - completed**
  - **Spares will be shipped to CERN with remaining modules**
- **Dimensions, Envelope & Mounting Scheme - approved by TC team**
- **Prototypes of scintillator & optical components assembled & tested**
- **Preparing for Production**
  - **PO's issued for Scintillator (Bicron BC408) & WLS fiber (.93 mm dia. Kuraray Y11) for gap modules**
  - **PO's issued for mechanical components of crack modules**
  - **Mechanical models have been made to check fit and develop light sealing plan**

Production Plans/Schedule

- Gap scintillator will be cut to shape and grooves milled at Fermilab / June '03
- WLS fiber to be mirrored at Fermilab then glued and polished into connectors at MSU / June '03
- Gap modules will be assembled and tested at UTA / June '04
- Mechanical components of crack modules will be assembled at MSU / Jan. '04
- Money for purchase of scintillator & WLS fiber for the crack modules is pending approval by US ATLAS managers

R. Miller
MSU

Other Issues

- **Testing & Calibration**
  - **Use cosmic muons at UTA/MSU to measure relative performance and check light tightness**
  - **Calibration & monitor with Cs source (gap modules) and muons (gap & crack) after installation in detector**
- **Special Modules**
  - **Special gap scintillators will be made for EB modules that are missing C10 cell**
  - **Special mounting plates will be made for modules with modified inner R - allows us to use standard scintillators on these modules**
- **Light Covers**
  - **Plastic film to cover fiber cables, connectors - detailed design in progress**

R. Miller
MSU