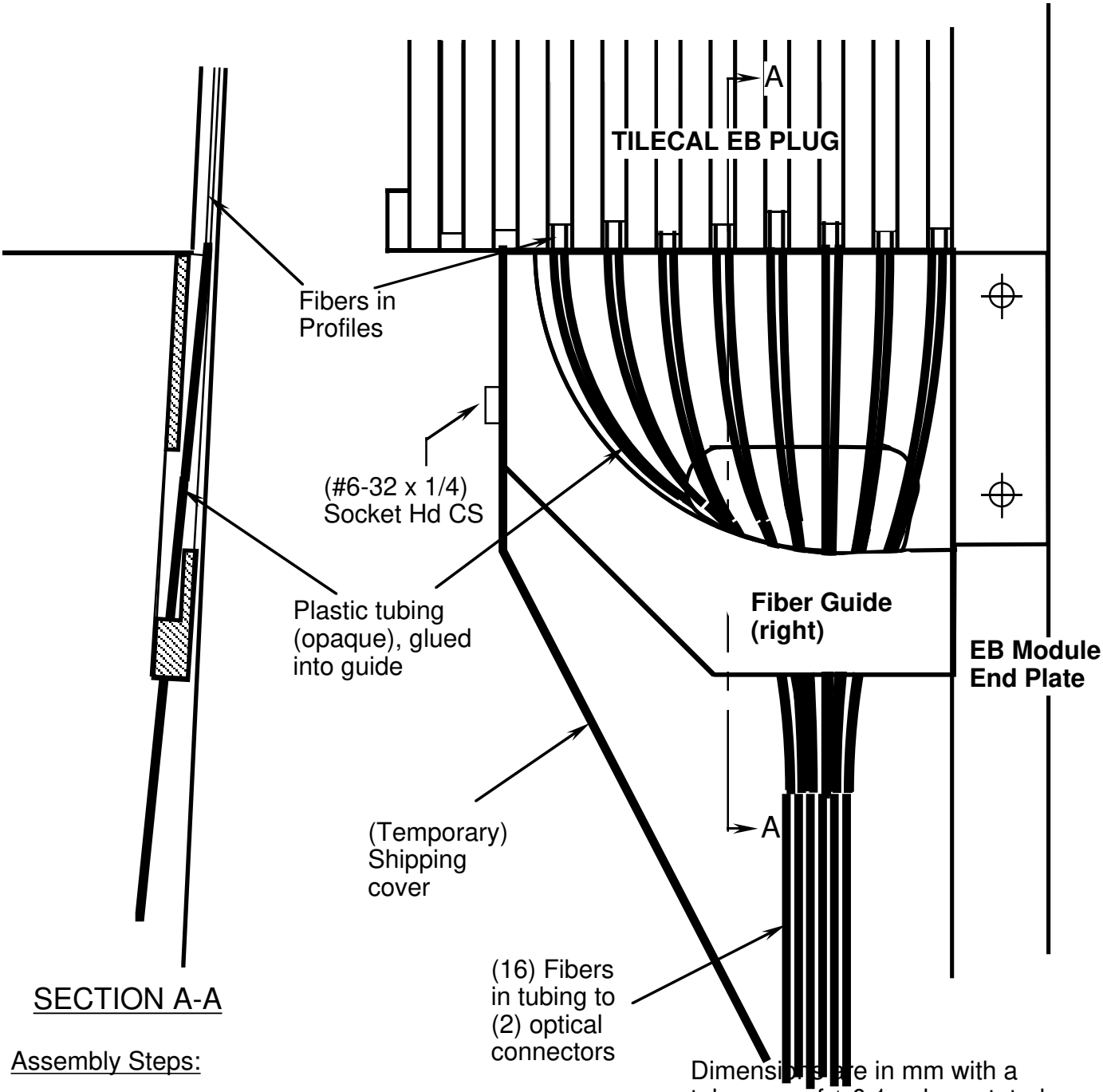

SECTION A-A

Dimensions are in mm with a tolerance of ± 0.1 unless stated otherwise. Dimensions in parentheses are in Inches

Assembly Steps:

1. Tubing is glued into guide using a jig to maintain the desired positions.
2. Tubing is trimmed to desired lengths. Free ends are fitted into connector plug.
3. Fibers are inserted through tubing and glued into connector.
4. Connector is polished.
5. Assembly is shipped to optical instrumentation site.
6. Assembly is mounted onto EB Module.
7. Free fiber ends are inserted into profiles.
8. Profiles are inserted and fibers routed as usual.
9. Temporary covers are attached to protect connectors and fibers during shipping and barrel assembly.

MICHIGAN STATE UNIVERSITY HIGH ENERGY PHYSICS			
DRAWN	R. Miller		
DATE	9-1-98	REV	C
PROJECT	ATLAS ITC Scintillator		
MATERIAL			
TITLE	Fiber Guide Assembly		
DWG. NO	HEP-B-025 -375		
SCALE	1:1		